CANADIAN Panel Tech

MEGAFRAMING

LIGHTWEIGHT STEEL FRAMING- STRUCTURAL

PRODUCT TECHNICAL GUIDE

LIGHTWEIGHT STEEL FRAMING: STRUCTURAL

TABLE OF CONTENTS

contact@cpt-group.ca Tel: (289) 588-0936 Address: 36 Simpson Rd Bolton, ON L7E 1Y4

Product Identification

Note:

For sections available in both 33 and 50 ksi, the specifier must clearly indicate which yield point is required when ordering.

For example: 600S162-54 (50 ksi).

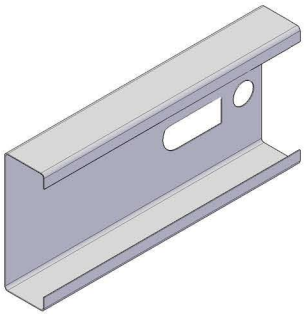

"S" - C-STUD/JOIST
S-SECTIONS

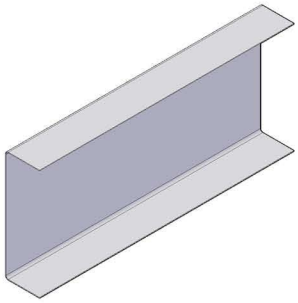

"T" - TRACK
T-SECTIONS

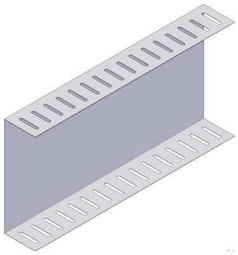

MEGAMULTI SLOTTED
TRACK (MMT)

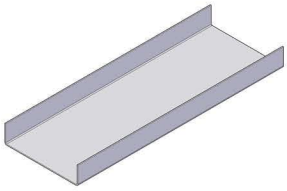

"U" - CHANNEL
U-SECTIONS

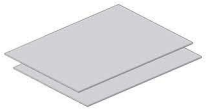

FLAT STRAP

MEGA BYPASS
DEFLECTION

MEGA DEFLECTION TOP
CLIPS F-SECTIONS

MEGA JOIST &
MEGA BRIDGING CLIPS

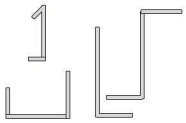

SPECIAL ORDER
SECTIONS

Nomenclature Example

- All SSMA products have a four-part identification code that identifies the web depth, flange width, style, and mil thickness.

Member Web Depth

(Example: 6" = **600** × $^{1}/_{100}$ inch)

All member depths are given in $^{1}/_{100}$ inch.

For all "T" sections, member depth is the inside to inside dimension.

Flange Width

(Example: 1 5/2" = 1.625" ≈ **162** × $^{1}/_{1000}$ inch)

All flange widths are given in $^{1}/_{100}$ inch.

600 S 162 54

Style

(Example: Stud or Joist section = **S**

Nomenclature uses the following four characters to designate the profile:

S = Stud or Joist Sections

T = Track Sections

U= Channel Sections

F = Furring Channel Sections

Mil Thickness

(Example: 0.054" = 54 mils; 1 mil = $^{1}/_{1000}$ inch)

Mil thickness is the minimum base steel thickness measured in $^{1}/_{1000}$ inch. Minimum base steel thickness represents 95 percent of the design thickness.

contact@cpt-group.ca Tel: (289) 588-0936 Address: 36 Simpson Rd Bolton, ON L7E 1Y4

MegaFraming Structural Stud

- Used for axial load-bearing and wind-bearing applications.
- Manufactured with stringent quality control procedures to provide assurance to clients of consistent quality and reliability.
- Customization: Structural studs are custom cut to length with tight tolerance making it perfect for axial loading application.
- 100% Recyclable.
- Meets LEED's Requirement.

** Please refer to the table for Lip Stiffener Length Design.*

Code Compliance

- ASTM A1003 : Standard Specification for Steel Sheet, Carbon, Metallic- and Nonmetallic-Coated for Cold-Formed Framing Members
- ASTM C754 : Standard Specification for Installation of Steel Framing Members to Receive Screw-Attached Gypsum Panel Products.
- ASTM A653 : Standard Specification for Steel Sheet, Zinc-Coated by the Hot-Dip Process

Structural Studs

Stud Designation	Web (W)		Flange (F)	
	in.	mm	in.	mm
162S125- 33	1-5/8"	41.3	1-1/4"	31.75
250S125- 33	2-1/2"	63.5	1-1/4"	31.75
362S125- 33, 43, 54	3-5/8"	92.075	1-1/4"	31.75
362S162- 33, 43, 54, 68, 97			1-5/8"	41.28
362S200- 33, 43, 54, 68, 97			2"	50.80
362S250- 33, 43, 54, 68, 97			2-1/5"	63.50
362S300- 33, 43, 54, 68, 97			3"	76.20
400S125- 33, 43, 54	4"	101.6	1-1/4"	31.75
400S162- 33, 43, 54, 68, 97			1-5/8"	41.28
400S200- 33, 43, 54, 68, 97			2"	50.80
400S250- 33, 43, 54, 68, 97			2-1/5"	63.50
400S300- 33, 43, 54, 68, 97			3"	76.20
600S125- 33, 43, 54	6"	152.4	1-1/4″	31.75
600S162- 33, 43, 54, 68, 97, 118			1-5/8"	41.28
600S200- 33, 43, 54, 68, 97, 118			2"	50.80
600S250- 33, 43, 54, 68, 97, 118			2-1/5"	63.50
600S300- 33, 43, 54, 68, 97, 118			3"	76.20
800S162- 43, 54, 68, 97, 118	8"	203.2	1-5/8"	41.28
800S200- 43, 54, 68, 97, 118			2"	50.80
800S250- 43, 54, 68, 97, 118			2-1/5"	63.50
800S300- 43, 54, 68, 97, 118			3"	76.20

Structural Joist

Stud Designation	Web (W)		Flange (F)	
	in.	mm	in.	mm
800S162- 43, 54, 68, 97, 118	8"	203.2	1-5/8"	41.28
800S200- 43, 54, 68, 97, 118			2"	50.80
800S250- 43, 54, 68, 97, 118			2-1/5"	63.50
800S300- 43, 54, 68, 97, 118			3"	76.20
1000S162- 43, 54, 68, 97, 118	10"	254	1-5/8"	41.28
1000S200- 43, 54, 68, 97, 118			2"	50.80
1000S250- 43, 54, 68, 97, 118			2-1/5"	63.50
1000S300- 43, 54, 68, 97, 118			3"	76.20
1200S162- 43, 54, 68, 97, 118	12"	304.8	1-5/8"	41.28
1200S200- 43, 54, 68, 97, 118			2"	50.80
1200S250- 43, 54, 68, 97, 118			2-1/5"	63.50
1200S300- 43, 54, 68, 97, 118			3"	76.20

Gauge - Thickness

Gauge	Design Thickness			Yield Strength (Fy)		Coating
	in.	mm	Mils	ksi	MPa	
20	0.0346	0.88	33	33	228	G60, G90
18	0.0451	1.15	43	33, 50	228, 345	G60, G90
16	0.0566	1.44	54	50	345	G60, G90
14	0.0713	1.81	68	50	345	G60, G90
12	0.1017	2.58	97	50	345	G90
10	0.1242	3.15	118	50	345	G90

MegaFraming Structural Track

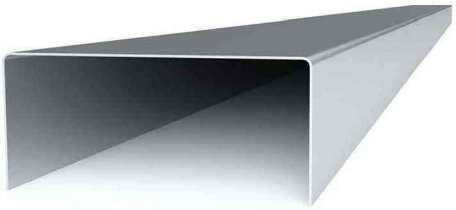

Structural metal framing tracks are essential components used in construction of load-bearing walls and structural framed in buildings. They are typically installed horizontally at the top and bottom of all wall assemblies, providing support and stability to the vertical structural metal studs.

Benefits of MegaTrack

- Efficiency.
- Precision.
- Strength and Durability.

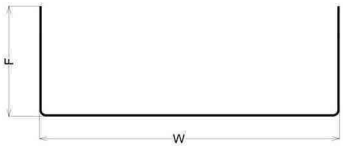

Code Compliance

- ASTM C754 : Installation of Steel Framing Member to Receive Screw- attched Gypsum Panel products.
- ASTM C1007: Standard Specification for Installation of Load-Bearing (Transverse and Axial) Steel Studs and Related Accessories.
- ASTM C653 : Standard Specification for Steel Sheet, Zinc-Coated by the Hot-Dip Process.

Mega Framing Track

Some sizes are not available due to the CSA S136 requirements for web depth to thickness ratio.

CSA S136 is North American Specification for the design of cold-formed steel structural members.

Structural Wall Track & Joist Rim Track

Stud Designation	Web (W)		Flange (F)	
	in.	mm	in.	mm
162T125- 33	1-5/8"	41.3	1-1/4"	31.75
250T125- 33	2-1/2"	63.5	1-1/4"	31.75
250T150- 33			1-1/2"	38.10
250T200- 33			2"	50.80
362T125- 33, 43, 54	3-5/8"	92.075	1-1/4"	31.75
362T150- 33, 43, 54, 68, 97			1-1/2"	38.10
362T200- 33, 43, 54, 68, 97			2"	50.80
400T125- 33, 43, 54	4"	101.6	1 1/4"	31.75
400T150- 33, 43, 54, 68, 97			1 1/2"	38.10
400T200- 33, 43, 54, 68, 97			2"	50.80
600T125- 33, 43, 54	6"	152.4	1 1/4"	31.75
600ST150 33, 43, 54, 68, 97, 118			1 1/2"	38.10
600T200- 33, 43, 54, 68, 97, 118			2"	50.80
600T250- 33, 43, 54, 68, 97, 118			2 1/5"	63.50
600T300- 33, 43, 54, 68, 97, 118			3"	76.20
800T125- 43, 54, 68, 97, 118	8"	203.2	1 1/4"	31.75
800T150- 43, 54, 68, 97, 118			1 1/2"	38.10
800T200- 43, 54, 68, 97, 118			2"	50.80
800T250- 43, 54, 68, 97, 118			2 1/5"	63.50
800T300- 43, 54, 68, 97, 118			3"	76.20

Structural Wall Track & Joist Rim Track

Stud Designation	Web (W)		Flange (F)	
	in.	mm	in.	mm
1000T125- 43, 54, 68, 97, 118	10"	254	1-1/4"	31.75
1000T150- 43, 54, 68, 97, 118			1-1/2"	38.10
1000T200- 43, 54, 68, 97, 118			2"	50.80
1000T250- 43, 54, 68, 97, 118			2-1/5"	63.50
1000T300- 43, 54, 68, 97, 118			3"	76.20
1200T125- 43, 54, 68, 97, 118	12"	304.8	1-1/4"	31.75
1200T150- 43, 54, 68, 97, 118			1-1/2"	38.10
1200T200- 43, 54, 68, 97, 118			2"	50.80
1200T250- 43, 54, 68, 97, 118			2-1/5"	63.50
1200T300- 43, 54, 68, 97, 118			3"	76.20

Gauge - Thickness

Gauge	Design Thickness			Yield Strength (Fy)		Coating
	in.	mm	Mils	ksi	MPa	
20	0.0346	0.88	33	33	228	G60, G90
18	0.0451	1.15	43	33, 50	228, 345	G60, G90
16	0.0566	1.44	54	50	345	G60, G90
14	0.0713	1.81	68	50	345	G60, G90
12	0.1017	2.58	97	50	345	G90
10	0.1242	3.15	118	50	345	G90

MegaMulti Slotted Track

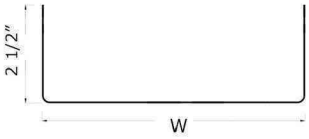

A multi-slotted track, also known as a slotted track, is a versatile component commonly used in wind load bearing-applications. MegaSlotted track offers a cost-effective and efficient solution for managing the deflection at the upper section of laterally loaded walls.

Code Compliance

- ASTM C754 : Installation of Steel Framing Member to Receive Screw- attached Gypsum Panel products.
- ASTM C1007 : Standard Specification for Installation of Load-Bearing Steel Studs and Related Accessories.
- ASTM C653 : Standard Specification for Sheet Steel, Zinc-Coated (Galvanized) by the Hot-Dip Process.

Mega Multi Slotted Track

Product Designation	Web (W)		Leg (L)		Design Thickness			Weight	Mass	Yield Strength (Fy)		Coating	Stock Length	Pcs/ Bundle
	in.	mm	in.	mm	in.	mm	Mils	lb/ft	kg/m	ksi	MPa		ft	
362 MMT 250-43	3-5/8"	92.08	2 1/2"	63.50	0.0451	1.15	43	1.25	1.86	33	228	G60	10	12
400 MMT 250-43	4"	101.60						1.31	1.95					
600 MMT 250-43	6"	152.40						1.60	2.38					
800 MMT 250-43	8"	203.20						1.94	2.89					
362 MMT 250-54	3-5/8"	92.08	2 1/2"	63.50	0.0566	1.44	54	1.54	2.29	50	345	G60	10	12
400 MMT 250-54	4"	101.60						1.62	2.41					
600 MMT 250-54	6"	152.40						2.03	3.02					
800 MMT 250-54	8"	203.20						2.41	3.59					
362 MMT 250-68	3-5/8"	92.08	2 1/2"	63.50	0.0713	1.81	68	1.95	2.91	50	345	G60	10	12
400 MMT 250-68	4"	101.60						2.10	3.13					
600 MMT 250-68	6"	152.40						2.50	3.73					
800 MMT 250-68	8"	203.20						3.05	4.54					

Please consult with the project Engineer of Record (EOR) or refer to the project's stamped drawings to determine the appropriate gauge .

Installation Guide

- Use minimum #10 screws with 18 and 20-gauge track; 14 and 16 gauge track, it's recommended to use minimum #12 screws. This will ensures proper fastening strength and durability for the respective track gauges.

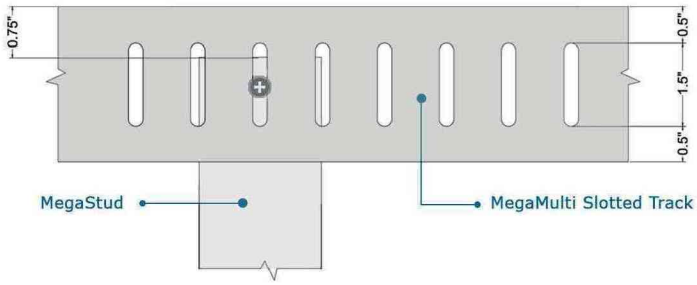

Mega Bridging Clip

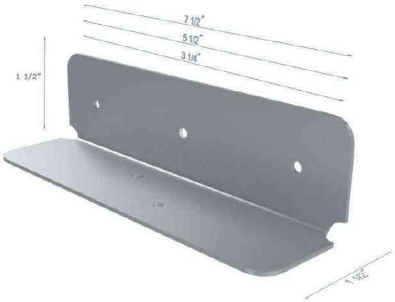

Bridging Clips are typically used in the Steel Framing Load Bearing Applications. It's the ideal way for mechanically fastening the Cold Formed Steel (CFS) Studs to the Bridging Channels.
The Connection of Mega Bridging Clip between the Mega Bridging Channel and The Steel Studs will provide twisting and lateral loads resistance.

Benefits of Mega Bridging Clip

- Predrilled guide holes for easy installation.
- Engineered for logical easy placement.
- Made with high quality 50 ksi & G90 materials that exceed standards requirements.

Code Compliance

- ASTM A1003: Standard Specification for Steel Sheet, Carbon, Metallic- and Nonmetallic-Coated for Cold-Formed Framing Members.
- ASTM A653 : Standard Specification for Steel Sheet, Zinc-Coated (Galvanized) or Zinc-Iron Alloy-Coated (Galvannealed) by the Hot-Dip Process.

Mega Bridging Clip											
Product Designation	Size		Design Thickness			Weight	Mass	Yield Strength (Fy)		Coating	Pcs/ Ctn
	in.	mm	in.	mm	Mils	lb	kg	ksi	MPa		
MBC 3	1.5 x 3.25 x 1.5	38.1 x 82.55 x 38.1	0.0566	1.44	54	0.16	0.07	50	345	G90	100
MBC 6	1.5 x 5.5 x 1.5	38.1 x 139.7 x 38.1				0.26	0.12				
MBC 8	1.5 x 7.5 x 1.5	38.1 x 190.5 x 38.1				0.36	0.16				

Installation Guide

- Use #10 self tap screws at the predrilled holes to attach the Mega Bridge Clip to the Mega Bridging Channel.
- Four screws are required for this connection.

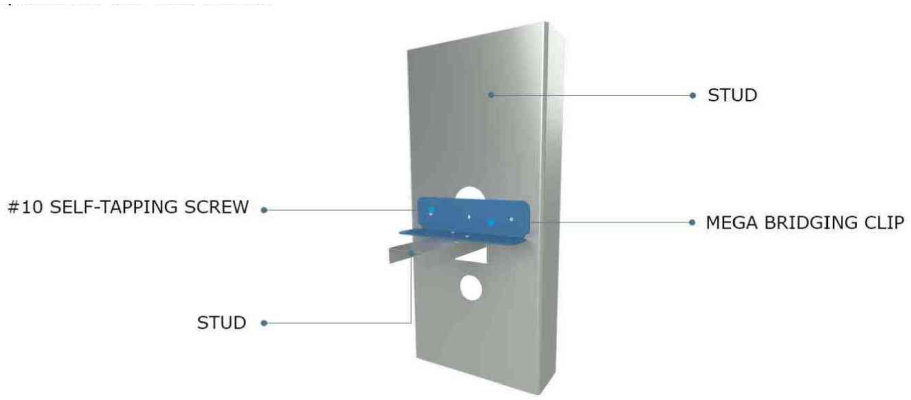

Mega Bridging Clip

Mega Joist Clip

Joist Clips are used in attaching the CFS joist to CFS rim track.

The Design of the type and number of screws will depend on the imposed loading.

Please consult with the project's design engineer for this connection.

Benefits of Mega Joist Clip

- Predrilled guide holes for easy installation.
- Engineered for logical easy placement.
- Made with high quality 50 ksi & G90 materials that exceed standards requirements.

Code Compliance

- ASTM A1003: Standard Specification for Steel Sheet, Carbon, Metallic- and Nonmetallic-Coated for Cold-Formed Framing Members.
- ASTM A653 : Standard Specification for Steel Sheet, Zinc-Coated (Galvanized) or Zinc-Iron Alloy-Coated (Galvannealed) by the Hot-Dip Process.

Mega Joist Clip											
Product Designation	Size		Design Thickness			Weight	Mass	Yield Strength (Fy)		Coating	Pcs/ Ctn
	in.	mm	in.	mm	Mils	lb	kg	ksi	MPa		
MJC 8	1.5 x7.5 x 1.5	38.1 x 190.5 x 38.1				0.45	0.20				
MJC 10	1.5 x 9.5 x 1.5	38.1 x 241.3 x 38.1	0.071	1.81	68	0.57	0.26	50	345	G90	50
MJC 12	1.5 x 11.5 x 1.5	38.1 x 292.1 x 38.1				0.69	0.31				

Installation Guide

- Use #10 or #12 self tap screws at the predrilled holes to attach Joist to the CFS Rim Track.
- Use screws at all predrilled holes.
- Consult with the project's design engineer when using.

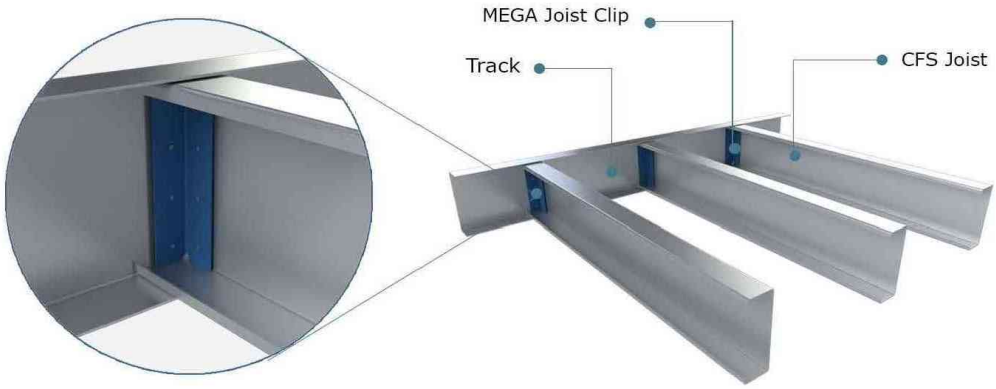

Mega Joist Connection

Mega Deflection Top Clips

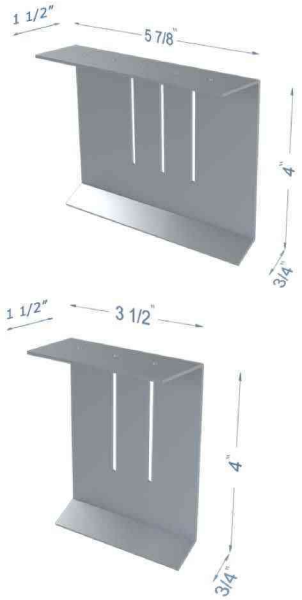

MTDC is available in two sizes and are used with 3 5/8" & 6" Studs for wind bearing curtain walls & laterally loaded framing members like interior walls.
The Clips allow for 2.5" deflection (1.25" on each side of the mechanical fastener).
Please Consult with the project's design engineer when using the Mega deflection clips for your application.

Benefits of Mega Deflection Top Clips

- Predrilled guide holes for easy installation.
- Made with high quality 50 ksi & G90 materials that exceed standards requirements.
- The MTDC Clips are used to replace or in combination with MMT (Mega Multi Slotted track).

Code Compliance

- ASTM A1003: Standard Specification for Steel Sheet, Carbon, Metallic- and Nonmetallic-Coated for Cold-Formed Framing Members.
- ASTM A653 : Standard Specification for Steel Sheet, Zinc-Coated (Galvanized) or Zinc-Iron Alloy-Coated (Galvannealed) by the Hot-Dip Process.

Mega Top Clip											
Product Designation	Size		Design Thickness			Weight	Mass	Yield Strength (Fy)		Coating	Pcs/ Ctn
	in.	mm	in.	mm	Mils	lb/ft	kg	ksi	MPa		
MTDC 3	1.5 x 4 x 3.5 x 0.75	38.1 x 101.6 x 88.9 x 38.1	0.0713	1.81	68	0.44	0.20	50	345	G90	50
MTDC 6	1.5 x 4 x 5.875 x 0.75	38.1 x 101.6 x 149.23 x 38.1				0.74	0.34				

Installation Guide

- Studs Must be cut less than full height to allow for the required deflection.
- Connection to the Structure of the building can be achieved using screws, PAF, or concrete connectors depending on the structure.
- Use #12 Screws placed at the middle of the slot to allow for equal deflection at both sides.
- Two screws are required with MTDC 3 and three screws are required with MTDC 6.
- Consult with the project's design engineer to verify using MTDC for the right application.

Mega Top Clip (MTC 3)

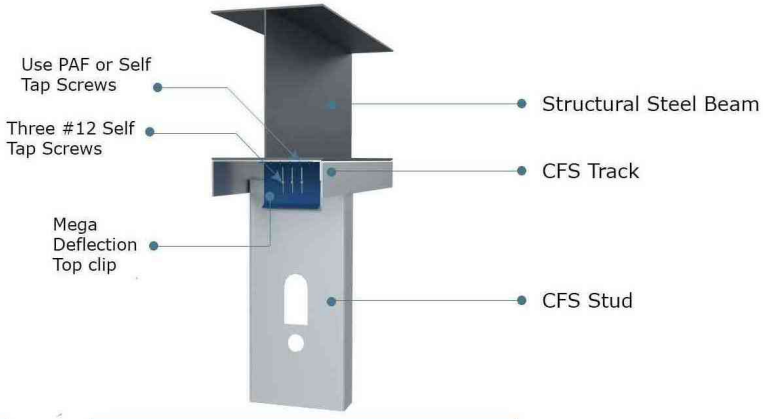

Mega Top Clip (MTC 6)

Mega Bypass Deflection/ Fixed Clip

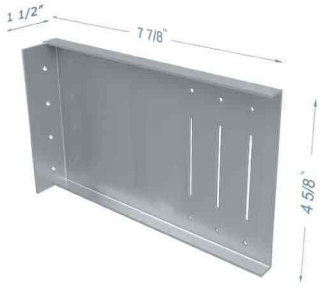

MBDC is available in two sizes and are used with 6" & 8" steel studs for wind bearing curtain walls. When used for deflection; the Clips allow for 2.5" (1.25" on each direction) building movement independent of the CFS framing. MBDC Can be used as fixed connection clip in various CFS application by ignoring the slots and using the predrilled holes on the 6", or 8" side. Please Consult with the project's design engineer when using the MBDC clips for your application.

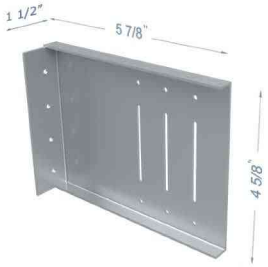

Benefits of Mega Bypass Deflection

- Predrilled guide holes for easy installation.
- Made with 12G high quality 50 ksi & G90 Steel that exceed standards requirements.
- The MBDC Clips are used either in a direct way connecting the structure to the exterior wall framing, or through outrigger stud member.
- Universal Clip for both direction of the application for ease of use and identification.

Code Compliance

- ASTM A1003: Standard Specification for Steel Sheet, Carbon, Metallic- and Nonmetallic-Coated for Cold-Formed Framing Members.
- ASTM A653: Standard Specification for Steel Sheet, Zinc-Coated (Galvanized) or Zinc-Iron Alloy-Coated (Galvannealed) by the Hot-Dip Process.

Mega Bypass Deflection/ Fixed Clip

Product Designation	Size		Design Thickness			Weight	Mass	Yield Strength (Fy)		Coating	Pcs/ Ctn
	in.	mm	in.	mm	Mils	lb	kg	ksi	MPa		
MBDC 6	1.5 x 5.875 x 4.875 x 0.625	38.1 x 149.2 x 123.8 x 15.9	0.1017	2.58	97	1.24	0.56	50	345	G90	50
MBDC 8	1.5 x 7.875 x 4.875 x 0.625	38.1 x 200 x 149.23 x 15.9				1.57	0.71				

Installation Guide

Deflection Connection:

- Connection to the Structure of the building can be achieved using screws, PAF, or concrete connectors depending on the structure.
- Use (3) #14 Screws placed at the middle of the slot to allow for equal deflection at both sides.
- Consult with the project's design engineer to verify using MBDC in your application.

Fixed Connection:

- Connection to the Structure of the building can be achieved using screws, PAF, or concrete connectors depending on the structure.
- Use (6) of #12 screws through the predrilled holes to attach the MBDC clip to the CFS framing.
- Consult with the project's design engineer to verify using MBDC in your application.

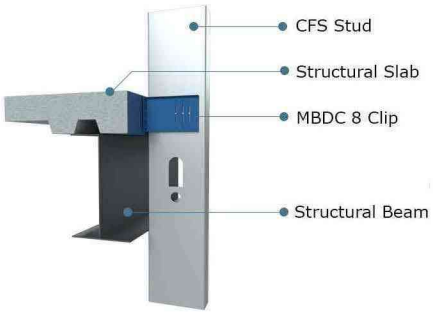

Mega Fixed Clip (MBDC 8)

Mega Fixed Clip (MBDC 6)

Mega U-Channel / Bridging Channel

U-channels are commonly used in the framing industry for various purposes and applications. They are used in walls, joist and truss applications in bridging, bracing and general framing. U-channels also used in combination with MegaFurring channel in dropped ceiling assemblies.

Benefits of Mega U-Channel

- Standard Lengths
- Load Distribution
- Prevention of lateral Movement
- Available in G40, G60 & G90

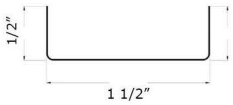

Code Compliance

- ASTM C754 : Standard Specification for Installation of Steel Framing Members to Receive Screw-Attached Gypsum Panel Products.
- ASTM C654 : Standard Specification for Nonstructural Steel Framming Member.
- ASTM C653 : Standard Specification for Sheet Steel, Zinc-Coated (Galvanized) by the Hot-Dip Process.

Mega U-channel / Bridging channel

Product Designation	Web (A)		Leg (B)		Design Thickness			Weight	Mass	Yield Strength (Fy)		Coating	Stock Length	Pcs/ Bundle
	in.	mm	in.	mm	in.	mm	Mils	lb/ft	kg/m	ksi	MPa		ft	
150U50-43	1 1/2"	38.1	1/2"	12.7	0.0451	1.146	43	0.36	0.532	33	228	G60	10	
150U50-54					0.0566	1.438	54	0.44	0.657	50				

Limiting Ceiling Spans of Mega U-channel (ft) - L/240

Specified Dead Loads			4 psf					6 psf					13 psf					15 psf				
Section Designation	Fy (ksi)	Span Type	Spacing (in.) o.c.					Spacing (in.) o.c.					Spacing (in.) o.c.					Spacing (in.) o.c.				
			24	36	48	60	72	24	36	48	60	72	24	36	48	60	72	24	36	48	60	72
150U50-54	33	Single	5' 11"	5' 2"	4' 8"	4' 4"	4' 1"	5' 2"	4' 6"	4' 1"	3' 9"	3' 7"	4' 0"	3' 6"	3' 2"	2' 11"	2' 9"	3' 9"	3' 4"	3' 0"	2' 10"	2' 8"
	33	Multiple	7' 6"	6' 7"	6' 0"	5' 7"	5' 3"	6' 7"	5' 9"	5' 3"	4' 10"	4' 7"	5' 1"	4' 5"	4' 0"	3' 9"	3' 6"	4' 10"	4' 3"	3' 10"	3' 7"	3' 3"

Limiting Ceiling Spans of Mega U-channel (ft) - L/360

Specified Dead Loads			4 psf					6 psf					13 psf					15 psf				
Section Designation	Fy (ksi)	Span Type	Spacing (in.) o.c.					Spacing (in.) o.c.					Spacing (in.) o.c.					Spacing (in.) o.c.				
			24	36	48	60	72	24	36	48	60	72	24	36	48	60	72	24	36	48	60	72
150U50-54	33	Single	5' 11"	5' 2"	4' 8"	4' 4"	4' 1"	5' 2"	4' 6"	4' 1"	3' 9"	3' 7"	4' 0"	3' 6"	3' 2"	2' 11"	2' 9"	3' 9"	3' 4"	3' 0"	2' 9"	2' 8"
	33	Multiple	7' 4"	6' 5"	5' 10"	5' 5"	5' 1"	6' 5"	5' 7"	5' 1"	4' 9"	4' 5"	4' 11"	4' 4"	3' 11"	3' 8"	3' 5"	4' 9"	4' 1"	3' 9"	3' 6"	3' 3"

Table Notes

1 -Multiple spans indicate two or more equal spans continuous over interior supports.

2 -Compression flanges assumed unbraced.

3 -Web crippling based on 3/4" bearing at end and interior supports.

Mega U-channel / Bridging channel Section Properties

Section Designation	Base Design Thickness (in.)	Depth A (in.)	Flange B (in.)	F_y (ksi)	GROSS							EFFECTIVE		
					Weight (lb/ft)	Area (in.^{2})	I_x (in.^{4})	r_x (in.)	I_y (in.^{4})	r_y (in.)	V_{rg} (kip)	I_{xd} (in.^{4})	S_{xe} (in.^{3})	M_{rx} (k-in.)
150U50-43	0.0451	1.5	0.5	50	0.357	0.10	0.1324	0.555	0.0022	0.147	0.13	0.032	0.043	2.21
150U50-54	0.0566	1.5	0.5	50	0.441	0.13	0.039	0.549	0.0027	0.145	1.65	0.039	0.052	2.73

Note: Inside bend radius taken as 3/32"

Load Bearing Typical Details

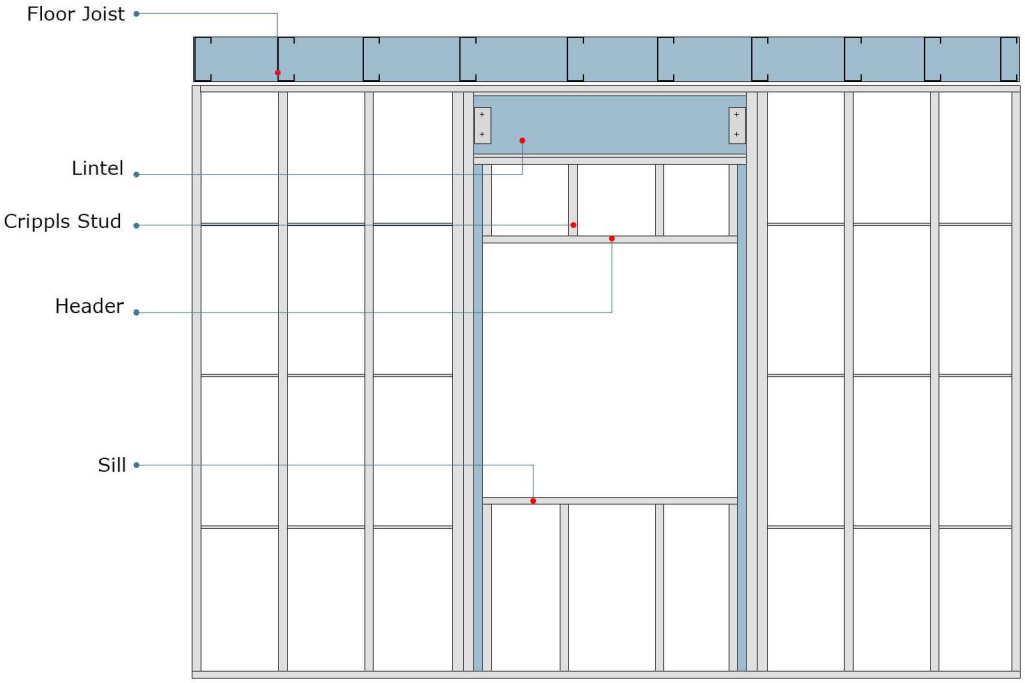

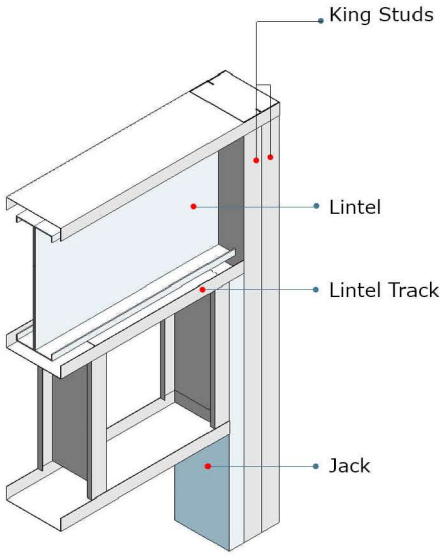

Wind Bearing Cripple Studs in Wall Openings

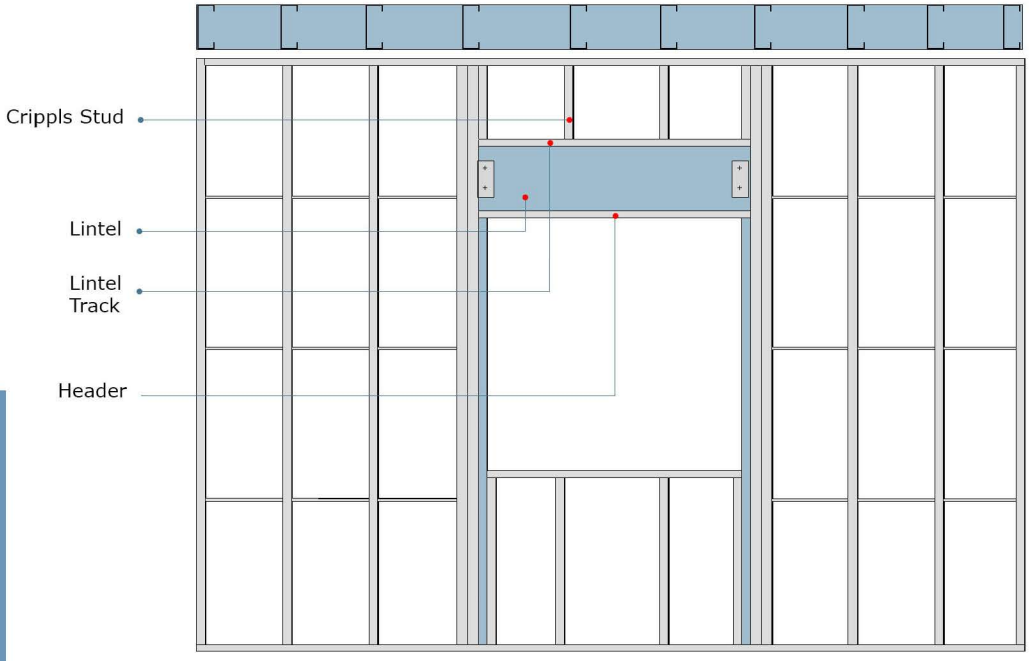

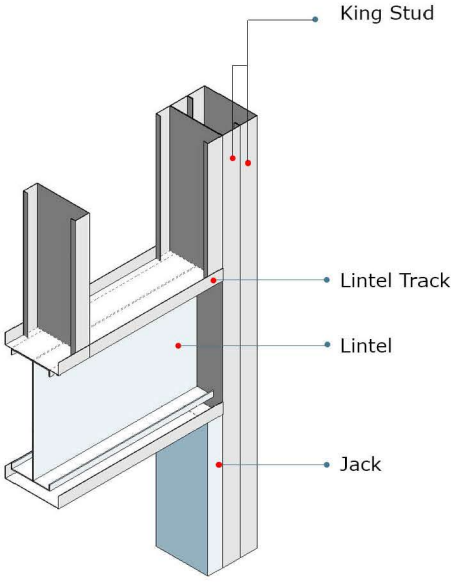

Load Bearing Cripple Stud In Wall Openings

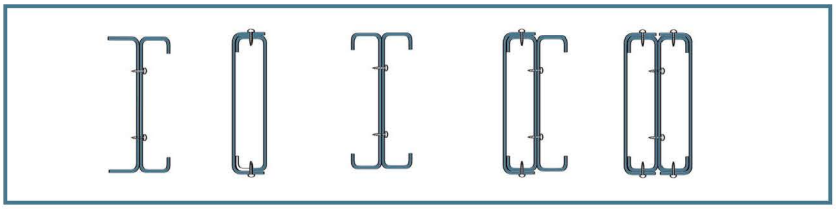

- Members combination must be engineered for built-up beams. The diagram illustrates how to combine various members
- Contractor can use clips with screws or welding on those assemblies.

Load Bearing Typical Details

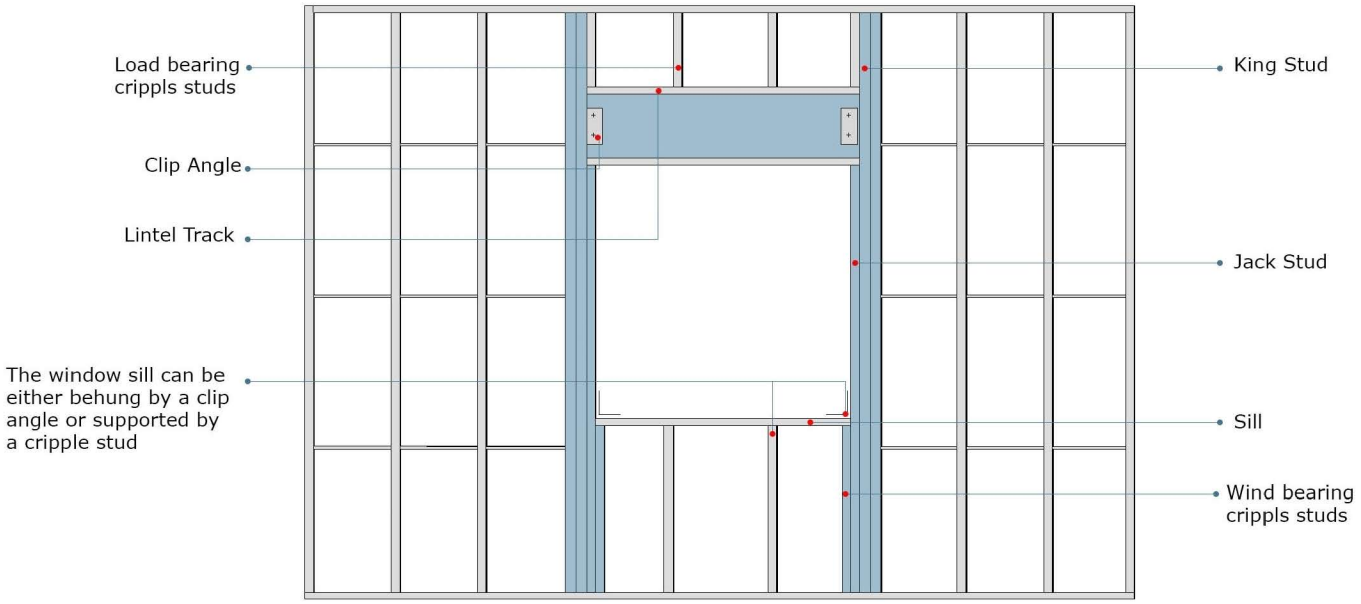

Framing Wall Openinings

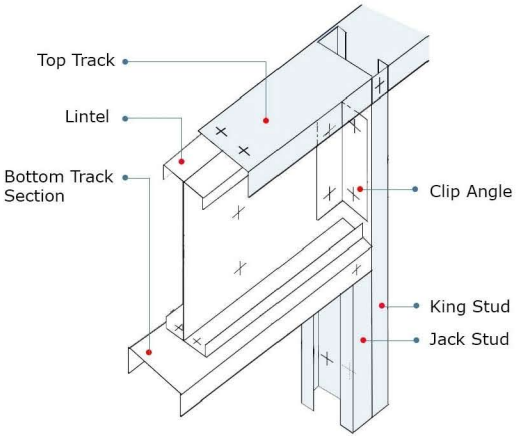

Framing Back To Back Lintels

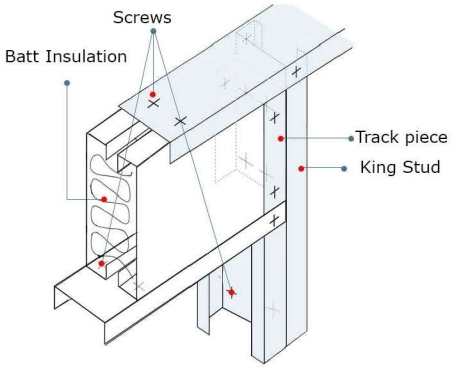

Framing Box Lintels

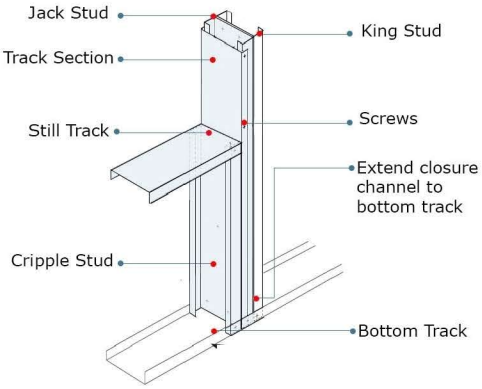

Window Sill Framing

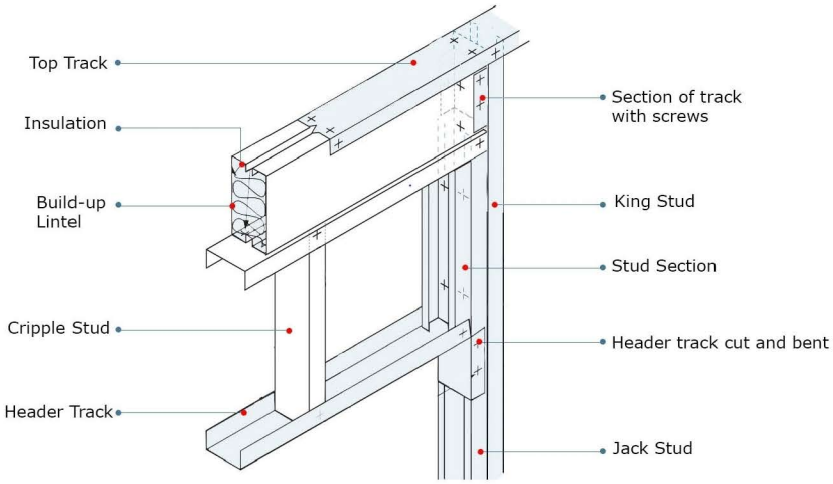

Window Head Framing

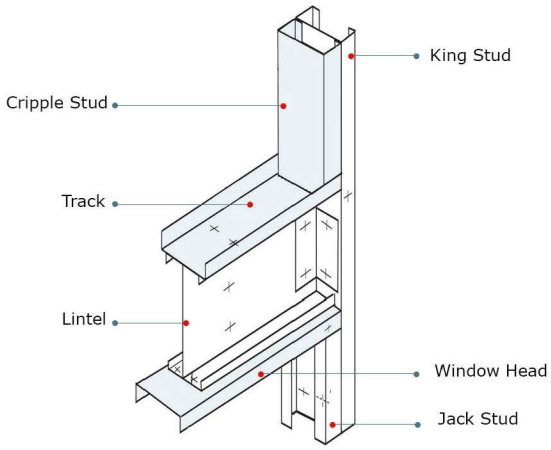

Load bearing Cripple Studs

- Please consult with the project structural engineer for exact details suitable for your application.

Typical LSF Floor Joist Details

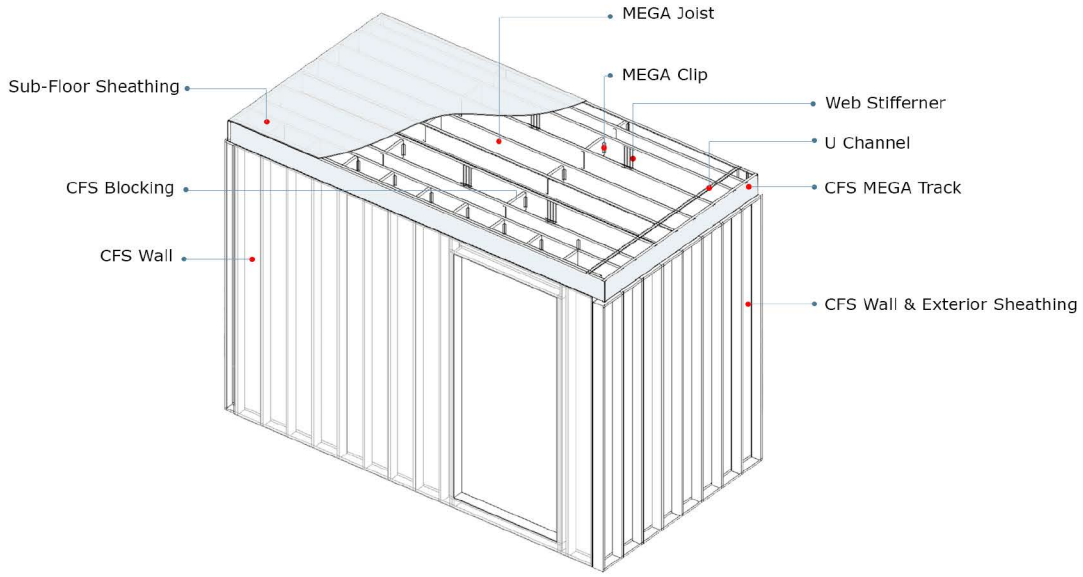

Floor Framing

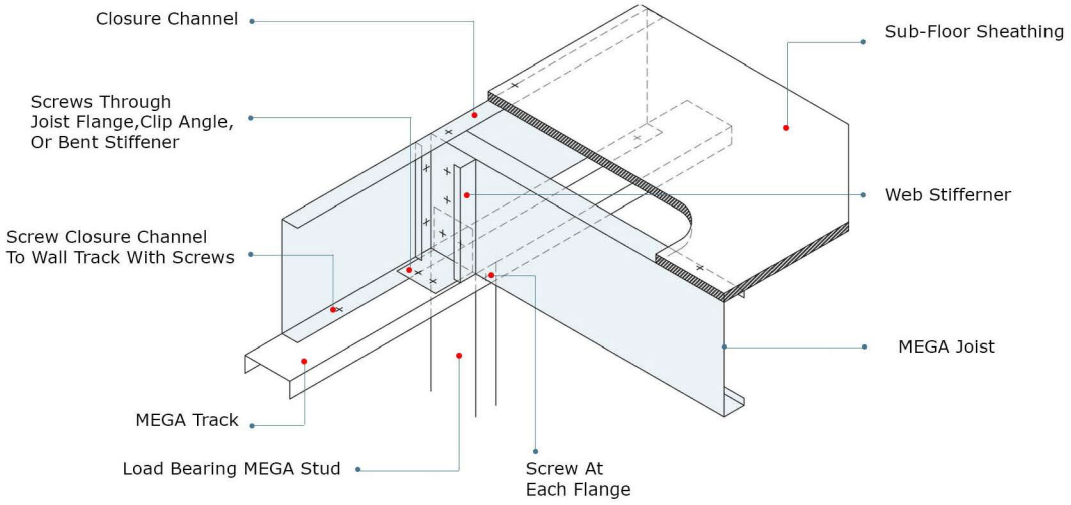

Floor Joists On Loadbearing Walls

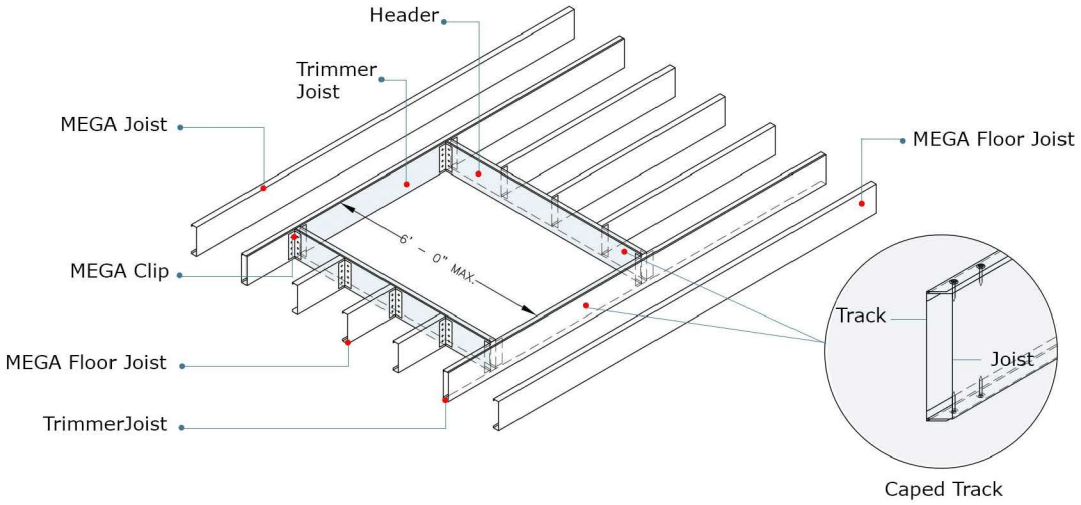

Framing Floor Openings

Typical LSF Floor Joist Details

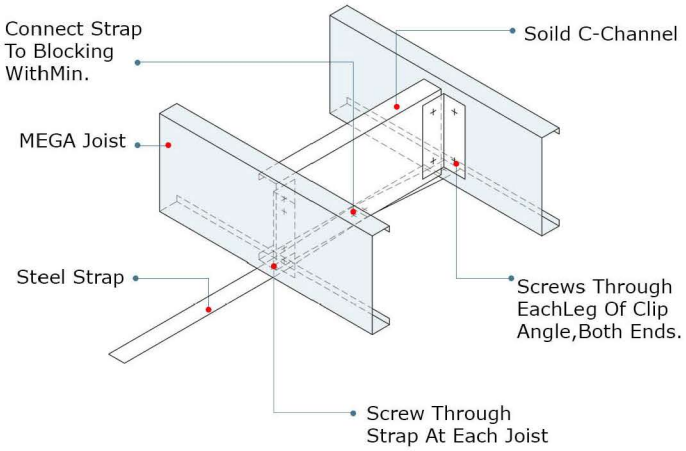

Stud Section Blocking

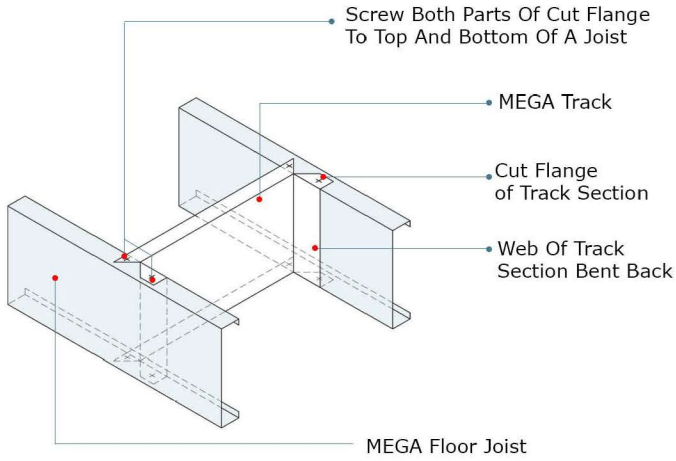

Track Section Blocking

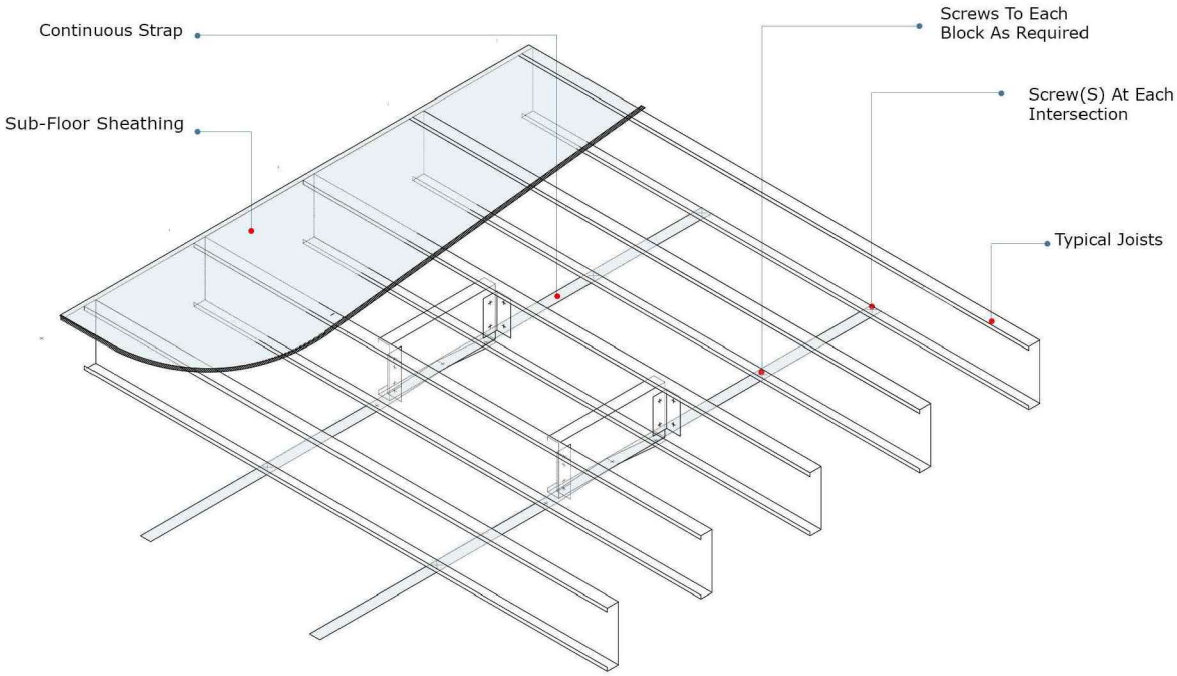

Block and Strap Bridging

Typical LSF Roof Truss Details

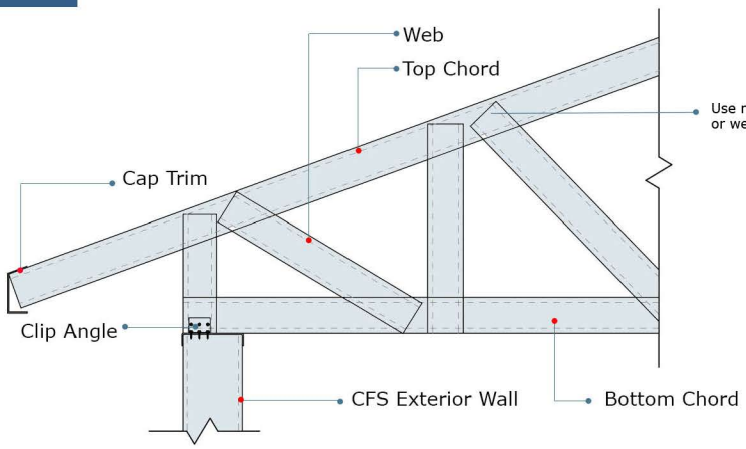

Truss Bearing on Exterior Wall

3D Visualization of Cold-Formed Steel Pitched Trusses

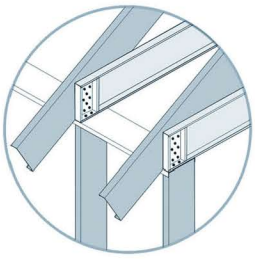

A Ceiling Joist & Rafter Connection

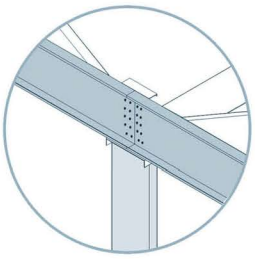

B Spliced Ceilling Joist

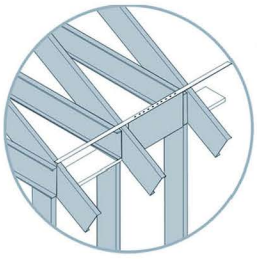

C Roof Rafter Bracing

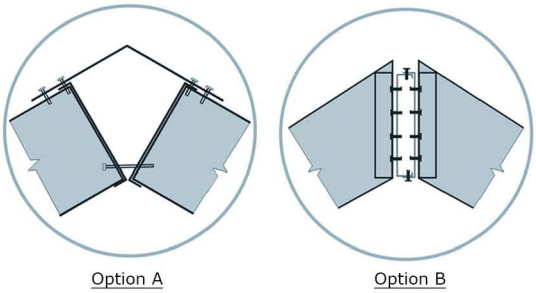

D Ridge Member Connection Alternatives

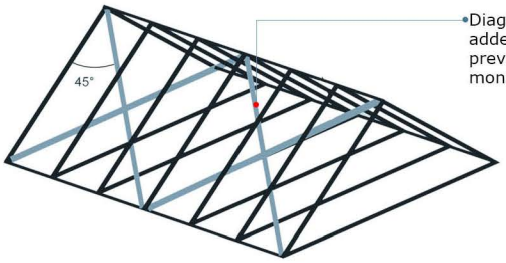

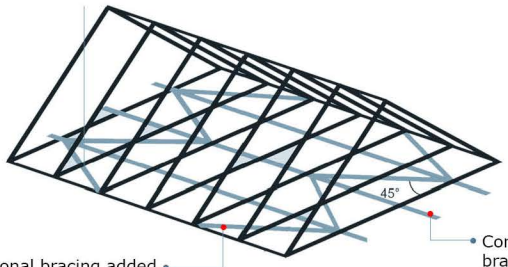

- All permanent bracing must be provided in accordance with engineered truss details and drawings.

Truss Bracing

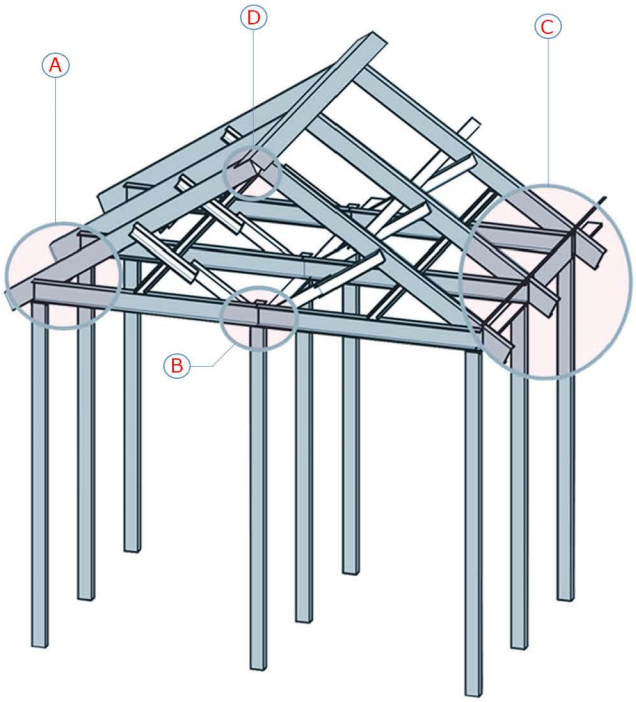

3D of Cold-Formed Steel Pitched Trusses

Typical LSF Roof Truss Details

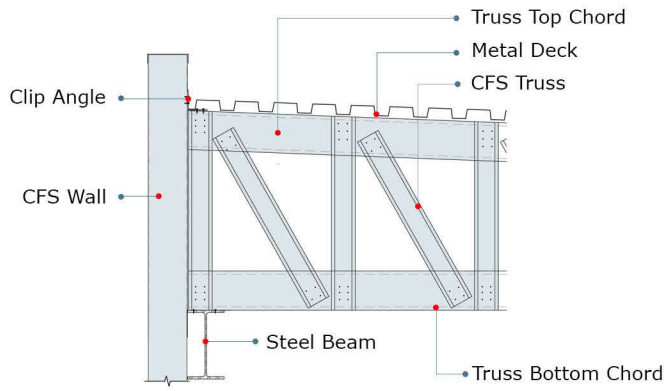

CFS Boxed Truss At Exterior Wall

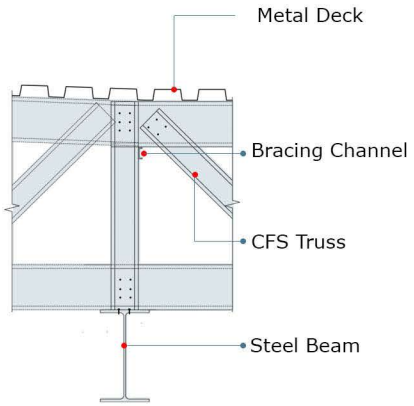

CFS Boxed Truss Bearing at Interior Steel Beam

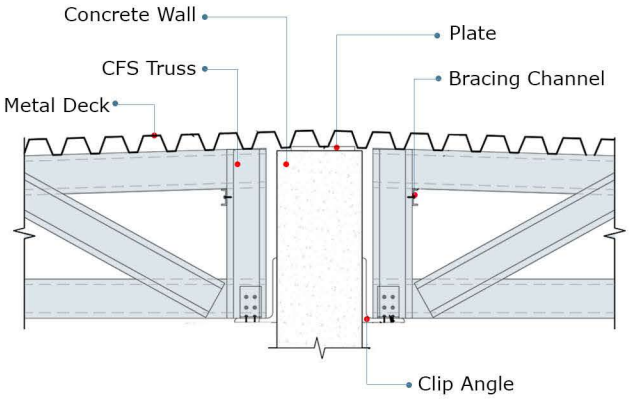

CFS Boxed Truss At Interior Concrete Wall

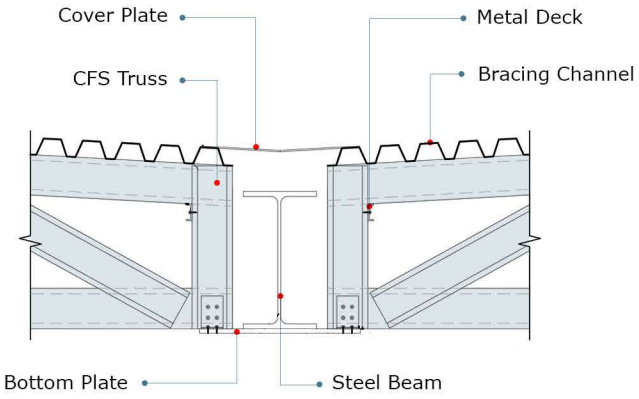

CFS Boxed Truss Bearing at Interior Corridor Beam

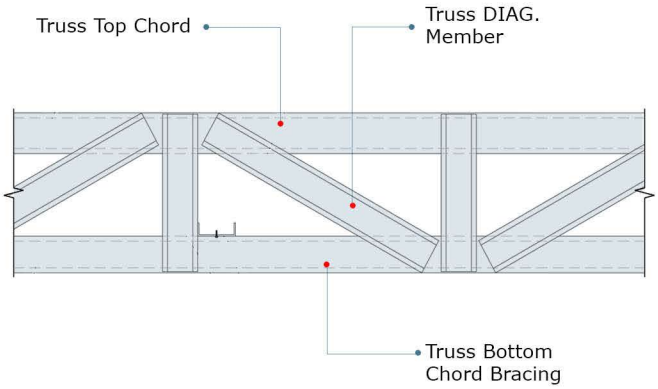

Typical Boxed Truss Chord Bracing

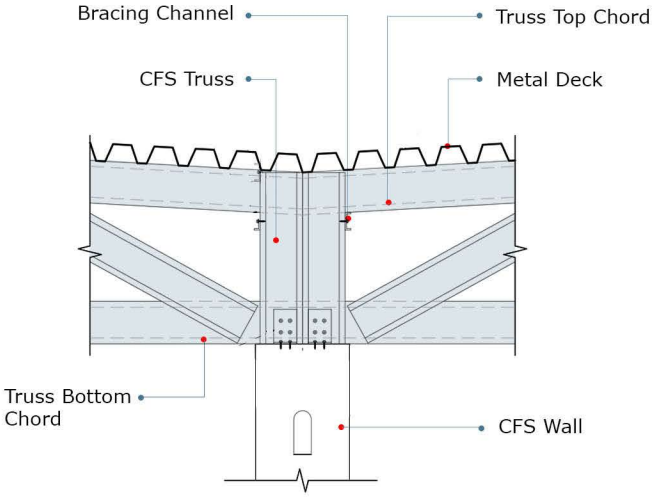

CFS Boxed Truss Bearing at Interior CFS Wall

Lip Stiffener Length Design

■ The lip length on a stud or joist will be related to the flange width as listed in the Table below.

Design Lip Length for Studs and Joists				
Section	Flange Width		Lip Length	
	in	mm	in	mm
S125	1.250	31.8	0.188	4.8
S162	1.625	41.3	0.500	12.7
S200	2.000	50.8	0.625	15.9
S250	2.500	63.5	0.625	15.9
S300	3.000	76.2	0.625	15.9

Steel Thickness Design

■ Products are cold-formed to shape from sheet steel with a steel thickness listed in below Table.
Product thickness will be referenced to the corresponding designation thickness.

Steel Thickness Table				
Designation Thickness (mil)	Minimum Thickness[1] (in)	Design Thickness[1] (in)	Design Inside Corner Radii[2] (in)	Gauge
33	0.0329	0.0346	0.0764	20 – Structural
43	0.0428	0.0451	0.0712	18
54	0.0538	0.0566	0.0849	16
68	0.0677	0.0713	0.1069	14
97	0.0966	0.1017	0.1525	12
118	0.118	0.1242	0.1863	10

- *[1]Minimum thickness represents 95% of the design and is the minimum acceptable thickness delivered to the jobsite based on CSA S136 Section A2.4.*
- *[2]The tables in this catalog are calculated based on inside corner radius listed in this table. The inside corner radius is the maximum of 3/32 – t/2 or 1.5t, truncated after the fourth decimal place (t = design thickness). Centerline bend radius is calculated by adding half of the design thickness to listed corner radius.*

Web Depth (h) to Thickness (t) Ratios [2,3,4]

Mil Thickness	18 mil		33 mil		43 mil		54 mil		68 mil		97 mil		118 mil	
Design Thickness (in)	0.0188		0.0346		0.0451		0.0566		0.0713		0.1017		0.1242	
Inside Bend Radius (in)	0.0843		0.0764		0.0712		0.0849		0.1069		0.1525		0.1863	
Depth (in)	h (in)	h/t	h (in)	h/t	h (in)	h/t	h (in)	h/t	h (in)	h/t	h (in)	h/t	h (in)	h/t
1.625	1.419	75	1.403	41	1.392	31	1.342	24	1.269	18	1.117	11	1.004	8
2.5	2.294	122	2.278	66	2.267	50	2.217	39	2.144	30	1.992	20	1.879	15
3.625	3.419	182	3.403	98	3.392	75	3.342	59	3.269	46	3.117	31	3.004	24
4	3.794	202 [1]	3.778	109	3.767	84	3.717	66	3.644	51	3.492	34	3.379	27
6	5.794	-	5.778	167	5.767	128	5.717	101	5.644	79	5.492	54	5.379	43
8	7.794	-	7.778	225 [1]	7.767	172	7.717	136	7.644	107	7.492	74	7.379	59
10	9.794	-	9.778	-	9.767	217 [1]	9.717	172	9.644	135	9.492	93	9.379	76
12	11.794	-	11.778	-	11.767	-	11.717	207 [1]	11.644	164	11.492	113	11.379	92

[1]h/t exceeds 200
[2]h value used for h/t calculation is the flat width of the web. For S members, this is the out-to-out member size, minus twice the thickness, minus twice the inside bend radius.
[3]h/t values exceeding 260 are marked with a dash (-).
[4]h/t values in this table apply to S (studs and joists) members only and do not apply to tracks and channels.

contact@cpt-group.ca Tel: (289) 588-0936 Address: 36 Simpson Rd Bolton, ON L7E 1Y4

Material Specifications

■ Structural and Non-Structural members are coated to meet the minimum code requirements. Products manufactured by Canadian Panel Tech meet the requirements of the following specifications:

Product Type	Material Specifications	Min Yield *(ksi)*	Min Tensile *(ksi)*	Minimum Metallic Coating Designation
Non-structural Products ASTM C645	ASTM A653, SS Grade 33	33	45	G40
	ASTM A1003, Grade 33 (NS33)	33	... [A]	G401, A401, AZ502, GF303, T1-254, T2-1004, 60G/60G5
Structural Products ASTM C955 (CP60 Coatings)	ASTM A653, SS Grade 33	33	45	G60
	ASTM A1003, Grade 33 Type H (ST33H)	33	45	G601, A601, AZ502, GF303
	ASTM A653, SS Grade 50 Class 1	50	65	G60
	ASTM A1003, Grade 50 Type H (ST50H)	50	65	G601, A601, AZ502, GF303
	ASTM A653 HSLA Grade 50	50	65	G60

- *[1]A653 Standard for steel sheet, zinc coated (galvanized) or zinc-iron alloy-coated (galvannealed) by the hot-dip process.*
- *[2]A792 Standard for steel sheet, 55% aluminum-zinc alloy-coated by the hot-dip process*
- *[3]A875 Standard for steel sheet, zinc-5% aluminum alloy-coated by the hot-dip process*
- *[4]A463 Standard for steel sheet, aluminum coated by the hot-dip process.*
- *[5]A879 Standard for steel sheet, zinc coated by the electrolytic process for application requiring designation of the coating mass on each surface.*
- *[A]No tensile requirements for Non-structural steel in accordance with ASTM A1003 standards*

Coating Specification

■ The base steel thickness can be determined from measuring the coated thickness and deducting the following metallic coating thickness.

Coating Designation (Imperial)	Coating Designation (Metric)	Coating Thickness (in)	Coating Thickness (mm)
G40*	Z120	0.0007	0.017
G60	Z180	0.0010	0.025
G90	Z275	0.0015	0.039
AZ50	AZM150	0.0016	0.040
ZA55	AZM165	0.0017	0.044

- *Note: *G40 coating only for non-structural products (NS)*

■ Products comply with the minimum metallic.
Coating weight [mass] requirements as shown in table below.

Coating Weight [Mass] requirement (Metallic Coating)	
Member Type	**Coating Designation**
Structural	G60 [Z180][A] AZ50 [AZM150][B]
Non-Structural	G40[Z120][A] AZ250 [AZM150][B]

- *[A]Zinc-Coated steel sheet as described in ASTM Specification A653/A792M*
- *[B]55% aluminum-zinc alloy-coated steel sheet as described in ASTM specification A792/A792*

Design Yield Stress

Design Yield Stress		
Designation Thickness	**Designation Thickness**	
	(ksi)	**(Mpa)**
18	33	230
33	33	230
43	33	230
54	50	345
68	50	345
97	50	345
110	50	345
118	50	345

MegaFraming products are galvanized steel that to be cold formed from steel meeting the requirements of AISI S220 or AISI S240 as applicable in compliance with ASTM A653/A653M type. The design yield stress of the material shall be related to the thickness as listed in Table below. Non-structural members may have a design yield stress greater than 33 ksi (230 MPa) if the product satisfies the applicable requirement of ASTM C645.

Structural Property Symbols

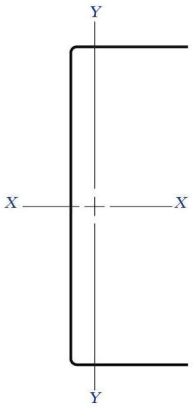

Gross Properties

I_x: Moment of inertia of the cross section about the x-axis.

S_x: Section modulus about the x-axis.

R_x: Radius of gyration of cross section about the x-axis.

I_y: Moment of inertia of cross section about the y-axis.

R_y: Radius of gyration of cross section about the y-axis.

Effective Properties

Effective moment of inertia about the x-axis.

S_{xe}: Effective section modulus about the x-axis.

M_{al}: Allowable moment based on local buckling.

M_{ad}: Allowable moment based on distortional buckling, assuming Kφ = 0.

M_a: Allowable moment for track and channel members, based on local buckling only.

V_{ag}: Allowable strong axis shear away from punchout, calculated in accordance with AISI S100 Section C3.2.1.

V_{anet}:Allowable strong axis shear at the punchout, calculated in accordance with AISI S100 Section C3.2.2.

Torsional and Other Properties

J: St. Venant torsional constant. The numbers shown in the tables for J have been multiplied by 1,000. The actual values can be obtained by dividing the listed numbers by 1,000.

C_w: Torsional warping constant.

X_o: Distance from the shear center to the centroid along the principal x-axis.

m: Distance from shear center to mid-plane of web.

R_o: Polar radius of gyration of cross section about the shear center.

β : 1- (Xo/Ro)2

L_u: Critical unbraced length for lateral-torsional buckling. Members are considered fully braced when unbraced length is less than Lu.

Kφ Distortional buckling moment (Mad) is calculated without the beneficial effect of sheathing to rotational stiffness. Kφ= 0.

Typical Service Hole Spacing

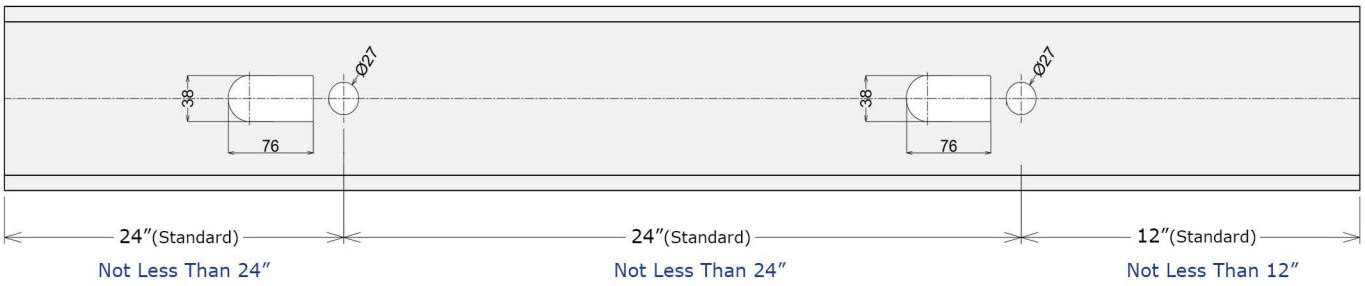

Stud Designation	Lip (in.)	Base Design Thickness (in.)	F_y (ksi)	GROSS							PERFORATED EFFECTIVE								TORSIONAL						L_u (in.)
				Weight (lb/ft)	Area (in.^{2})	I_x (in.^{4})	r_x (in.)	I_y (in.^{4})	r_y (in.)	V_{rg} (kip)	I_{xd} (in.^{4})	S_{xe} (in.^{3})	M_{rxLB} (k-in.)	M_{rxDB} (k-in.)	V_{rn} (kip)	M_{ryLB} web comp. (k-in.)	M_{ryLB} lip comp. (k-in.)	M_{ryDB} lip comp. (k-in.)	Jx1000 (in.^{4})	C_w (in.^{6})	x_o (in.)	m (in.)	r_o (in.)	ß	
162S125-33	0.188	0.0346	33	0.495	0.145	0.0671	0.679	0.0281	0.440	0.769	0.0660	0.0692	2.06	1.92	0.134	0.931	0.931	0.988	0.0580	0.0157	1.01	0.583	1.29	0.391	29.2
250S125-33	0.188	0.0346	33	0.598	0.176	0.178	1.01	0.0327	0.431	1.248	0.175	0.125	3.72	3.16	0.510	1.02	1.05	1.03	0.0701	0.0404	0.885	0.532	1.41	0.605	28.8
362S125-33	0.188	0.0346	33	0.730	0.215	0.421	1.40	0.0366	0.413	1.31	0.414	0.182	5.40	4.89	0.667	1.03	1.08	1.08	0.0856	0.0939	0.769	0.480	1.65	0.783	28.5
362S125-43	0.188	0.0451	33	0.945	0.278	0.541	1.40	0.0463	0.408	2.22	0.535	0.269	7.98	7.05	0.864	1.35	1.36	1.46	0.188	0.118	0.758	0.473	1.64	0.786	28.4
362S125-54	0.188	0.0566	50	1.17	0.344	0.661	1.39	0.0552	0.400	4.31	0.655	0.321	14.4	12.5	1.30	2.44	2.45	2.63	0.367	0.142	0.744	0.466	1.62	0.790	22.8
362S162-33	0.500	0.0346	33	0.892	0.262	0.551	1.45	0.0993	0.616	1.31	0.551	0.268	7.95	7.79	0.667	2.38	2.53	2.64	0.105	0.297	1.31	0.789	2.05	0.592	42.6
362S162-43	0.500	0.0451	33	1.16	0.340	0.710	1.45	0.127	0.611	2.22	0.710	0.372	11.0	10.9	0.864	3.13	3.23	3.46	0.230	0.376	1.30	0.782	2.04	0.594	42.5
362S162-54	0.500	0.0566	50	1.44	0.422	0.873	1.44	0.154	0.604	4.31	0.873	0.443	20.0	19.3	1.30	5.78	5.94	6.37	0.451	0.457	1.28	0.774	2.02	0.597	34.4
362S162-68	0.500	0.0713	50	1.78	0.524	1.07	1.43	0.186	0.596	5.59	1.07	0.574	25.8	25.4	1.29	7.12	7.13	7.67	0.887	0.552	1.26	0.765	2.00	0.600	34.4
362S162-97	0.500	0.1017	50	2.46	0.724	1.44	1.41	0.241	0.577	7.61	1.44	0.776	41.4*	41.4	1.12	9.17	9.17	9.93	2.50	0.723	1.23	0.745	1.95	0.606	31.5
362S200-33	0.625	0.0346	33	1.01	0.297	0.648	1.48	0.177	0.772	1.31	0.637	0.294	8.73	8.96	0.667	3.58	3.69	3.79	0.118	0.577	1.74	1.03	2.41	0.478	53.5
362S200-43	0.625	0.0451	33	1.31	0.385	0.836	1.47	0.227	0.767	2.22	0.836	0.427	12.7	12.6	0.864	4.74	4.92	5.28	0.261	0.734	1.73	1.02	2.40	0.480	53.5
362S200-54	0.625	0.0566	50	1.63	0.479	1.03	1.47	0.277	0.761	4.31	1.03	0.489	22.0	22.2	1.30	8.80	9.10	9.39	0.511	0.896	1.72	1.02	2.38	0.482	43.3
362S200-68	0.625	0.0713	50	2.03	0.595	1.27	1.46	0.337	0.753	5.59	1.27	0.666	30.0	29.5	1.29	11.0	11.0	11.9	1.01	1.09	1.70	1.01	2.36	0.484	43.3
362S200-97	0.625	0.1017	50	2.81	0.826	1.71	1.44	0.446	0.735	7.61	1.71	0.929	48.1*	48.2	1.12	14.5	14.5	15.7	2.85	1.44	1.66	0.986	2.32	0.487	40.4
362S250-33	0.625	0.0346	33	1.13	0.331	0.760	1.51	0.299	0.951	1.31	0.715	0.315	9.36	9.56	0.667	4.93	5.10	4.68	0.132	0.965	2.21	1.28	2.84	0.395	64.1
362S250-43	0.625	0.0451	33	1.46	0.430	0.980	1.51	0.385	0.946	2.22	0.973	0.449	13.3	13.6	0.864	6.53	6.80	6.63	0.292	1.23	2.20	1.28	2.83	0.396	64.1
362S250-54	0.625	0.0566	50	1.82	0.535	1.21	1.50	0.473	0.940	4.31	1.16	0.514	23.1	23.8	1.30	12.2	12.6	11.7	0.571	1.51	2.18	1.27	2.81	0.397	51.9
362S250-68	0.625	0.0713	50	2.27	0.666	1.49	1.50	0.578	0.931	5.59	1.47	0.689	31.0	31.8	1.29	15.3	15.4	15.6	1.13	1.84	2.17	1.26	2.79	0.398	52.0
362S250-97	0.625	0.1017	50	3.16	0.927	2.03	1.48	0.773	0.913	7.61	2.03	1.05	52.9*	48.7	1.12	20.4	20.4	22.3	3.20	2.45	2.13	1.24	2.75	0.401	49.3
362S300-33	0.625	0.0346	33	1.25	0.366	0.871	1.54	0.463	1.13	1.31	0.781	0.328	9.74	9.98	0.667	6.45	6.69	5.54	0.146	1.48	2.69	1.54	3.30	0.336	74.2
362S300-43	0.625	0.0451	33	1.62	0.475	1.12	1.54	0.596	1.12	2.22	1.06	0.459	13.6	14.3	0.864	8.55	8.91	7.91	0.322	1.89	2.67	1.53	3.28	0.336	74.3
362S300-54	0,625	0.0566	50	2.01	0.592	1.39	1.53	0.734	1.11	4.31	1.26	0.528	23.8	25.0	1.30	16.0	16.6	13.9	0.632	2.32	2.66	1.52	3.27	0.337	60.2
362S300-68	0.625	0.0713	50	2.51	0.738	1.72	1.53	0.900	1.11	5.59	1.62	0.716	32.2	33.7	1.29	20.1	20.3	18.8	1.25	2.83	2.64	1.51	3.24	0.337	60.3
362S300-97	0.625	0.1017	50	3.50	1.03	2.34	1.51	1.21	1.09	7.61	2.31	1.15	51.7	52.3	1.12	27.1	27.1	28.9	3.55	3.80	2.60	1.49	3.20	0.338	60.8
400S125-33	0.188	0.0346	33	0.774	0.228	0.531	1.53	0.0377	0.407	1.25	0.523	0.203	6.02	5.48	0.760	1.04	1.10	1.09	0.0908	0.118	0.738	0.465	1.74	0.821	28.4
400S125-43	0.188	0.0451	33	1.00	0.295	0.682	1.52	0.0476	0.402	2.22	0.675	0.301	8.95	7.94	1.04	1.36	1.39	1.47	0.200	0.148	0.727	0.459	1.73	0.824	28.2
400S125-54	0.188	0.0566	50	1.24	0.365	0.836	1.51	0.0567	0.394	4.31	0.828	0.361	16.2	14.1	1.56	2.46	2.51	2.66	0.390	0.178	0.713	0.451	1.72	0.828	22.7
400S162-33	0.500	0.0346	33	0.936	0.275	0.692	1.59	0.103	0.611	1.25	0.692	0.299	8.87	8.71	0.760	2.39	2.59	2.67	0.110	0.363	1.26	0.768	2.12	0.644	42.3
400S162-43	0.500	0.0451	33	1.21	0.357	0.892	1.58	0.131	0.606	2.22	0.892	0.417	12.4	12.3	1.04	3.15	3.31	3.50	0.242	0.460	1.25	0.761	2.11	0.647	42.1
400S162-54	0.500	0.0566	50	1.51	0.443	1.10	1.57	0.159	0.600	4.31	1.10	0.497	22.4	21.7	1.56	5.83	6.08	6.44	0.473	0.560	1.24	0.754	2.09	0.649	34.0
400S162-68	0.500	0.0713	50	1.87	0.550	1.35	1.56	0.192	0.591	6.24	1.35	0.648	29.2	28.7	1.74	7.21	7.31	7.76	0.933	0.677	1.22	0.745	2.07	0.653	34.0
400S162-97	0.500	0.1017	50	2.59	0.762	1.81	1.54	0.250	0.572	8.52	1.81	0.892	47.6*	47.6	1.55	9.42	9.42	10.1	2.627	0.889	1.18	0.725	2.03	0.660	31.1
400S200-33	0.625	0.0346	33	1.05	0.310	0.812	1.62	0.183	0.769	1.25	0.798	0.328	9.75	10.0	0.760	3.60	3.77	3.82	0.124	0.697	1.69	1.01	2.46	0.530	53.1
400S200-43	0.625	0.0451	33	1.37	0.402	1.05	1.62	0.235	0.764	2.22	1.05	0.478	14.2	14.1	1.04	4.77	5.04	5.32	0.272	0.886	1.68	1.00	2.45	0.532	53.0
400S200-54	0.625	0.0566	50	1.70	0.500	1.29	1.61	0.287	0.758	4.31	1.29	0.548	24.7	24.9	1.56	8.87	9.32	9.47	0.534	1.08	1.66	0.993	2.43	0.534	42.9
400S200-68	0.625	0.0713	50	2.12	0.622	1.59	1.60	0.349	0.750	6.24	1.59	0.750	33.8	33.1	1.74	11.1	11.3	12.1	1.05	1.32	1.64	0.983	2.41	0.536	42.9
400S200-97	0.625	0.1017	50	2.94	0.864	2.16	1.58	0.463	0.732	8.52	2.16	1.06	55.1*	55.1	1.55	14.9	14.9	15.9	2.98	1.75	1.61	0.963	2.37	0.541	39.9
400S250-33	0.625	0.0346	33	1.17	0.344	0.948	1.66	0.310	0.949	1.25	0.894	0.352	10.4	10.6	0.760	4.95	5.23	4.71	0.137	1.17	2.15	1.26	2.88	0.441	63.7
400S250-43	0.625	0.0451	33	1.52	0.447	1.22	1.66	0.399	0.945	2.22	1.22	0.502	14.9	15.1	1.04	6.57	6.97	6.66	0.303	1.49	2.14	1.25	2.87	0.443	63.6
400S250-54	0.625	0.0566	50	1.89	0.556	1.51	1.65	0.490	0.938	4.31	1.45	0.575	25.9	26.5	1.56	12.3	12.9	11.8	0.594	1.82	2.12	1.24	2.85	0.444	51.5
400S250-68	0.625	0.0713	50	2.36	0.693	1.86	1.64	0.599	0.929	6.24	1.84	0.774	34.8	35.6	1.74	15.4	15.8	15.7	1.17	2.23	2.11	1.24	2.83	0.445	51.6
400S250-97	0.625	0.1017	50	3.29	0.966	2.54	1.62	0.801	0.911	8.52	2.54	1.19	60.2*	54.8	1.55	21.0	21.0	22.6	3.33	2.98	2.07	1.21	2.78	0.448	48.8

Table Notes
1 - Gross section properties are based on the full-unreduced cross section of the stud sections, away from the punchouts.
2 - The factored moment resistance for design is based on the lesser of local and distortional buckling. Distortional buckling is based on an assumed rotational stiffness of Kφ = 0.

contact@cpt-group.ca Tel: (289) 588-0936 Address: 36 Simpson Rd Bolton, ON L7E 1Y4

Stud Designation	Lip (in.)	Base Design Thickness (in.)	F_y (ksi)	GROSS							PERFORATED EFFECTIVE								TORSIONAL						L_u (in.)
				Weight (lb/ft)	Area (in.^{2})	I_x (in.^{4})	r_x (in.)	I_y (in.^{4})	r_y (in.)	V_{rg} (kip)	I_{xd} (in.^{4})	S_{xe} (in.^{3})	M_{rxLB} (k-in.)	M_{rxDB} (k-in.)	V_{rn} (kip)	M_{ryLB} web comp. (k-in.)	M_{ryLB} lip comp. (k-in.)	M_{ryDB} lip comp. (k-in.)	Jx1000 (in.^{4})	C_w (in.^{6})	x_o (in.)	m (in.)	r_o (in.)	β	
400S300-33	0.625	0.0346	33	1.29	0.379	1.08	1.69	0.479	1.13	1.25	0.974	0.366	10.9	11.0	0.760	6.47	6.86	5.56	0.151	1.79	2.62	1.51	3.32	0.375	73.9
400S300-43	0.625	0.0451	33	1.67	0.492	1.40	1.69	0.617	1.12	2.22	1.32	0.513	15.2	15.8	1.04	8.60	9.13	7.95	0.334	2.28	2.61	1.50	3.30	0.376	73.9
400S300-54	0.625	0.0566	50	2.09	0.613	1.73	1.68	0.760	1.11	4.31	1.57	0.591	26.6	27.8	1.56	16.1	17.0	14.0	0.655	2.80	2.59	1.50	3.29	0.377	59.8
400S300-68	0.625	0.0713	50	2.60	0.764	2.14	1.67	0.933	1.11	6.24	2.02	0.804	36.2	37.5	1.74	20.3	20.8	18.9	1.30	3.43	2.57	1.49	3.26	0.378	59.9
400S300-97	0.625	0.1017	50	3.63	1.07	2.93	1.66	1.26	1.09	8.52	2.88	1.31	58.8	58.5	1.55	27.9	27.9	29.1	3.68	4.62	2.53	1.47	3.22	0.379	60.3
600S125-33	0.188	0.0346	33	1.01	0.297	1.41	2.18	0.0416	0.375	0.815	1.34	0.369	11.0	8.60	0.815	1.06	1.18	1.13	0.118	0.300	0.608	0.399	2.29	0.930	27.5
600S125-43	0.188	0.0451	33	1.31	0.385	1.82	2.17	0.0526	0.370	1.81	1.79	0.554	16.5	12.7	1.58	1.39	1.49	1.53	0.261	0.378	0.598	0.393	2.28	0.931	27.3
600S125-54	0.188	0.0566	50	1.63	0.479	2.24	2.16	0.0626	0.362	3.61	2.22	0.672	30.3	22.9	2.49	2.52	2.69	2.76	0.511	0.457	0.586	0.386	2.27	0.933	21.9
600S162-33	0.500	0.0346	33	1.17	0.344	1.79	2.28	0.1160	0.581	0.82	1.79	0.577	17.1	13.7	0.82	2.41	2.77	2.85	0.137	0.861	1.070	0.677	2.59	0.828	41.1
600S162-43	0.500	0.0451	33	1.52	0.447	2.32	2.28	0.148	0.576	1.81	2.32	0.767	25.1*	19.5	1.58	3.21	3.54	3.64	0.303	1.10	1.06	0.670	2.58	0.830	38.9
600S162-54	0.500	0.0566	50	1.89	0.556	2.86	2.27	0.1810	0.570	3.61	2.86	0.915	45.6*	34.6	2.49	5.93	6.53	6.70	0.594	1.340	1.050	0.663	2.56	0.833	31.3
600S162-68	0.500	0.0713	50	2.36	0.693	3.53	2.26	0.218	0.561	6.84	3.52	1.16	59.3*	46.7	3.68	7.40	7.86	8.09	1.17	1.63	1.03	0.655	2.54	0.835	30.8
600S162-97	0.500	0.1017	50	3.29	0.966	4.80	2.23	0.2830	0.542	13.40	4.80	1.600	85.3*	71.4	4.87	10.00	10.20	10.50	3.330	2.150	1.000	0.636	2.50	0.841	29.7
600S200-33	0.625	0.0346	33	1.29	0.379	2.08	2.34	0.209	0.743	0.815	2.04	0.621	18.4	15.7	0.815	3.63	4.06	3.97	0.151	1.59	1.46	0.901	2.86	0.740	51.6
600S200-43	0.625	0.0451	33	1.67	0.492	2.68	2.34	0.2680	0.739	1.81	2.68	0.872	25.9	22.3	1.58	4.84	5.43	5.54	0.334	2.030	1.450	0.894	2.84	0.742	51.4
600S200-54	0.625	0.0566	50	2.09	0.613	3.32	2.33	0.329	0.732	3.61	3.32	1.01	45.7	39.5	2.49	9.01	10.1	9.87	0.655	2.49	1.43	0.887	2.83	0.744	41.5
600S200-68	0.625	0.0713	50	2.60	0.764	4.10	2.32	0.4000	0.723	6.84	4.10	1.320	65.7*	53.3	3.68	11.40	12.20	12.60	1.300	3.050	1.420	0.878	2.81	0.746	39.3
600S200-97	0.625	0.1017	50	3.63	1.07	5.61	2.29	0.530	0.705	13.4	5.61	1.87	97.0*	82.6	4.87	15.7	16.2	16.7	3.68	4.08	1.38	0.859	2.77	0.752	38.3
600S250-33	0.625	0.0346	33	1.41	0.414	2.38	2.40	0.3560	0.928	0.82	2.26	0.649	19.3	16.4	0.82	5.00	5.67	4.84	0.165	2.670	1.890	1.140	3.19	0.651	62.5
600S250-43	0.625	0.0451	33	1.83	0.537	3.08	2.40	0.458	0.923	1.81	3.06	0.918	27.3	23.6	1.58	6.67	7.56	6.87	0.364	3.41	1.87	1.14	3.18	0.652	62.3
600S250-54	0.625	0.0566	50	2.28	0.670	3.82	2.39	0.5620	0.917	3.61	3.66	1.070	48.1	41.5	2.49	12.50	14.10	12.20	0.715	4.190	1.860	1.130	3.16	0.654	50.4
600S250-68	0.625	0.0713	50	2.84	0.836	4.73	2.38	0.688	0.908	6.84	4.67	1.39	62.3	56.3	3.68	15.8	17.2	16.3	1.42	5.15	1.84	1.12	3.14	0.657	50.3
600S250-97	0.625	0.1017	50	3.98	1.170	6.50	2.36	0.9230	0.889	13.40	6.50	2.060	104*	88.7	4.87	22.20	23.00	23.80	4.030	6.950	1.800	1.100	3.10	0.661	47.2
600S300-33	0.625	0.0346	33	1.53	0.448	2.69	2.45	0.552	1.11	0.815	2.45	0.663	19.7	16.8	0.815	6.53	7.48	5.67	0.179	4.09	2.33	1.39	3.56	0.572	73.0
600S300-43	0.625	0.0451	33	1.98	0.582	3.48	2.45	0.7110	1.110	1.81	3.30	0.944	28.0	24.4	1.58	8.73	10.00	8.13	0.395	5.240	2.310	1.380	3.54	0.574	72.8
600S300-54	0.625	0.0566	50	2.47	0.726	4.32	2.44	0.875	1.10	3.61	3.94	1.11	49.8	42.9	2.49	16.4	18.6	14.3	0.775	6.45	2.30	1.37	3.53	0.575	59.0
600S300-68	0.625	0.0713	50	3.09	0.907	5.35	2.43	1.0800	1.090	6.84	5.06	1.450	65.0	58.5	3.68	20.80	22.80	19.40	1.540	7.940	2.280	1.360	3.51	0.577	58.9
600S300-97	0.625	0.1017	50	4.32	1.27	7.38	2.41	1.45	1.07	13.4	7.25	2.25	101	93.2	4.87	29.6	30.7	30.3	4.38	10.8	2.24	1.34	3.46	0.581	58.8
800S162-43	0.500	0.0451	33	1.83	0.537	4.63	2.94	0.1600	0.546	1.34	4.48	1.020	30.3	26.5	1.34	3.23	3.66	3.72	0.364	2.080	0.926	0.601	3.13	0.912	39.8
800S162-54	0.500	0.0566	50	2.28	0.670	5.74	2.93	0.194	0.539	2.67	5.57	1.23	55.3	47.1	2.67	5.97	6.75	6.85	0.715	2.54	0.914	0.594	3.11	0.914	32.1
800S162-68	0.500	0.0713	50	2.84	0.836	7.09	2.91	0.2350	0.530	5.39	7.05	1.660	74.8	64.5	4.30	7.47	8.14	8.27	1.420	3.090	0.898	0.586	3.09	0.916	31.8
800S162-97	0.500	0.1017	50	3.98	1.17	9.72	2.88	0.305	0.511	13.9	9.71	2.43	109	103	7.60	10.2	10.6	10.8	4.03	4.11	0.866	0.568	3.05	0.920	31.3
800S200-43	0.625	0.0451	33	1.98	0.582	5.30	3.02	0.2920	0.708	1.34	5.30	1.290	38.4	30.5	1.34	4.87	5.63	5.72	0.395	3.800	1.280	0.811	3.35	0.855	50.3
800S200-54	0.625	0.0566	50	2.47	0.726	6.57	3.01	0.357	0.701	2.67	6.57	1.50	67.4	54.1	2.67	9.06	10.4	10.2	0.775	4.66	1.27	0.804	3.34	0.856	40.6
800S200-68	0.625	0.0713	50	3.09	0.907	8.14	3.00	0.4350	0.692	5.39	8.14	1.960	98.0*	73.8	4.30	11.40	12.70	12.90	1.540	5.710	1.250	0.796	3.32	0.859	38.4
800S200-97	0.625	0.1017	50	4.32	1.27	11.2	2.97	0.576	0.674	13.9	11.2	2.80	145*	117	7.60	16.0	16.8	17.1	4.38	7.68	1.21	0.777	3.28	0.863	37.2
800S250-43	0.625	0.0451	33	2.13	0.627	6.02	3.10	0.5000	0.893	1.34	5.98	1.310	39.0	32.1	1.34	6.71	7.88	7.09	0.425	6.370	1.680	1.040	3.63	0.787	61.5
800S250-54	0.625	0.0566	50	2.66	0.78	7.5	3.09	0.614	0.886	2.7	7.2	1.52	68.6	57	2.67	12.5	14.7	12.6	0.84	7.85	1.66	1.040	3.62	0.789	49.7
800S250-68	0.625	0.0713	50	3.33	0.98	9.3	3.08	0.752	0.877	5.4	9.1	2.06	92.6	78	4.30	15.9	17.9	16.8	1.66	9.65	1.64	1.030	3.60	0.791	49.5
800S250-97	0.625	0.1017	50	4.67	1.37	12.8	3.05	1.010	0.857	13.9	12.8	3.05	154*	125	7.60	22.6	24.0	24.5	4.73	13.10	1.61	1.010	3.56	0.796	46.3
800S300-43	0.625	0.0451	33	2.29	0.67	6.7	3.16	0.779	1.080	1.3	6.4	1.31	39	33	1.34	8.8	10.4	8.3	0.46	9.79	2.09	1.280	3.94	0.719	72.3
800S300-54	0.625	0.0566	50	2.86	0.84	8.4	3.16	0.959	1.070	2.7	7.7	1.53	69	58	2.67	16.5	19.4	14.7	0.90	12.10	2.07	1.270	3.92	0.721	58.5
800S300-68	0.625	0.0713	50	3.57	1.05	10.4	3.15	1.180	1.060	5.4	9.8	2.14	96.5	80	4.30	21.0	23.9	20.0	1.78	14.90	2.06	1.260	3.90	0.723	58.3
800S300-97	0.625	0.1017	50	5.02	1.47	14.4	3.12	1.600	1.040	13.9	14.1	3.30	149	130	7.60	30.0	32.2	31.3	5.08	20.30	2.02	1.240	3.86	0.727	58.0

Table Notes
1 - Gross section properties are based on the full-unreduced cross section of the stud sections, away from the punchouts.
2 - The factored moment resistance for design is based on the lesser of local and distortional buckling. Distortional buckling is based on an assumed rotational stiffness of Kφ = 0.

contact@cpt-group.ca Tel: (289) 588-0936 Address: 36 Simpson Rd Bolton, ON L7E 1Y4

Joist Designation	Lip (in.)	Base Design Thickness (in.)	F_y (ksi)	GROSS							PERFORATED EFFECTIVE								TORSIONAL						L_u (in.)
				Weight (lb/ft)	Area (in.^{2})	I_x (in.^{4})	r_x (in.)	I_y (in.^{4})	r_y (in.)	V_{rg} (kip)	I_{xd} (in.^{4})	S_{xe} (in.^{3})	M_{rxLB} (k-in.)	M_{rxDB} (k-in.)	V_{rn} (kip)	M_{ryLB} web comp. (k-in.)	M_{ryLB} lip comp. (k-in.)	M_{ryDB} lip comp. (k-in.)	Jx1000 (in.^{4})	C_w (in.^{6})	x_o (in.)	m (in.)	r_o (in.)	ß	
800S162-43	0.500	0.0451	33	1.83	0.537	4.64	2.94	0.160	0.546	1.34	4.48	1.02	30.3	26.5	1.34	3.23	3.66	3.72	0.364	2.08	0.926	0.601	3.13	0.912	39.8
800S162-54	0.500	0.0566	50	2.28	0.670	5.74	2.93	0.194	0.539	2.67	5.57	1.23	55.3	47.1	2.67	5.97	6.75	6.85	0.715	2.54	0.914	0.594	3.11	0.914	32.1
800S162-68	0.500	0.0713	50	2.84	0.836	7.09	2.91	0.235	0.530	5.39	7.05	1.66	74.8	64.5	4.30	7.47	8.14	8.27	1.42	3.09	0.898	0.586	3.09	0.916	31.9
800S162-97	0.500	0.1017	50	3.98	1.17	9.72	2.88	0.305	0.511	13.9	9.71	2.43	109	103	7.60	10.2	10.6	10.8	4.03	4.11	0.866	0.568	3.05	0.920	31.4
800S200-43	0.625	0.0451	33	1.98	0.582	5.30	3.02	0.292	0.708	1.34	5.30	1.29	38.4	30.5	1.34	4.87	5.63	5.72	0.395	3.80	1.28	0.811	3.35	0.855	50.3
800S200-54	0.625	0.0566	50	2.47	0.726	6.57	3.01	0.357	0.701	2.67	6.57	1.50	67.4	54.1	2.67	9.06	10.4	10.2	0.775	4.66	1.27	0.804	3.34	0.856	40.7
800S200-68	0.625	0.0713	50	3.09	0.907	8.14	3.00	0.435	0.692	5.39	8.14	1.96	98.0*	73.8	4.30	11.5	12.7	12.9	1.54	5.71	1.25	0.796	3.32	0.859	38.4
800S200-97	0.625	0.1017	50	4.32	1.27	11.2	2.97	0.576	0.674	13.9	11.2	2.80	145*	117	7.60	16.0	16.8	17.1	4.38	7.68	1.21	0.777	3.28	0.863	37.2
800S250-43	0.625	0.0451	33	2.13	0.627	6.02	3.10	0.500	0.893	1.34	5.98	1.31	39.0	32.1	1.34	6.71	7.88	7.09	0.425	6.37	1.68	1.04	3.63	0.787	61.5
800S250-54	0.625	0.0566	50	2.66	0.783	7.47	3.09	0.614	0.886	2.67	7.17	1.52	68.6	56.7	2.67	12.5	14.7	12.6	0.836	7.85	1.66	1.04	3.62	0.789	49.8
800S250-68	0.625	0.0713	50	3.33	0.978	9.26	3.08	0.752	0.877	5.39	9.14	2.06	92.6	77.7	4.30	15.9	17.9	16.8	1.66	9.65	1.64	1.03	3.60	0.791	49.6
800S250-97	0.625	0.1017	50	4.67	1.37	12.8	3.05	1.01	0.857	13.9	12.8	3.05	154*	125	7.60	22.6	24.0	24.5	4.73	13.1	1.61	1.01	3.56	0.796	46.4
800S300-43	0.625	0.0451	33	2.29	0.672	6.73	3.16	0.779	1.08	1.34	6.40	1.31	39.0	33.0	1.34	8.77	10.4	8.33	0.456	9.79	2.09	1.28	3.94	0.719	72.3
800S300-54	0.625	0.0566	50	2.86	0.839	8.36	3.16	0.959	1.07	2.67	7.66	1.53	69.0	58.3	2.67	16.5	19.4	14.7	0.896	12.1	2.07	1.27	3.92	0.721	58.5
800S300-68	0.625	0.0713	50	3.57	1.05	10.4	3.15	1.18	1.06	5.39	9.84	2.14	96.5	80.3	4.30	21.0	23.9	20.0	1.78	14.9	2.06	1.26	3.90	0.723	58.3
800S300-97	0.625	0.1017	50	5.02	1.47	14.4	3.12	1.60	1.04	13.9	14.1	3.30	149	130	7.60	30.0	32.2	31.3	5.08	20.3	2.02	1.24	3.86	0.727	58.0
1000S162-54	0.500	0.0566	50	2.66	0.783	9.95	3.57	0.204	0.511	2.12	9.31	1.57	71	58.2	2.12	5.99	6.88	6.95	0.836	4.20	0.812	0.538	3.69	0.952	31.3
1000S162-68	0.500	0.0713	50	3.33	0.978	12.3	3.55	0.247	0.502	4.27	11.9	2.15	96.9	80.9	4.27	7.50	8.31	8.39	1.66	5.12	0.798	0.531	3.67	0.953	31.0
1000S162-97	0.500	0.1017	50	4.67	1.37	17.0	3.52	0.320	0.483	12.6	17.0	3.27	147	132	9.17	10.2	10.8	10.9	4.73	6.83	0.768	0.514	3.63	0.955	30.4
1000S200-54	0.625	0.0566	50	2.86	0.839	11.3	3.67	0.378	0.671	2.12	10.6	1.70	76.7	67.7	2.12	9.09	10.7	10.4	0.896	7.67	1.14	0.737	3.90	0.915	39.8
1000S200-68	0.625	0.0713	50	3.57	1.05	14.0	3.65	0.460	0.662	4.27	13.6	2.42	109	93.5	4.27	11.5	13.0	13.2	1.78	9.40	1.12	0.729	3.88	0.917	39.6
1000S200-97	0.625	0.1017	50	5.02	1.47	19.3	3.62	0.610	0.643	12.6	19.3	3.74	168	151	9.17	16.1	17.2	17.4	5.08	12.7	1.09	0.711	3.84	0.920	39.0
1000S250-54	0.625	0.0566	50	3.05	0.896	12.7	3.76	0.653	0.854	2.12	12.2	1.88	84.5	71.5	2.12	12.6	15.1	12.9	0.957	12.9	1.51	0.958	4.14	0.868	49.1
1000S250-68	0.625	0.0713	50	3.81	1.12	15.8	3.75	0.799	0.844	4.27	15.6	2.77	124	98.8	4.27	16.0	18.4	17.2	1.90	15.9	1.49	0.950	4.12	0.870	48.8
1000S250-97	0.625	0.1017	50	5.36	1.58	21.8	3.72	1.07	0.825	12.6	21.8	4.18	211*	161	9.17	22.7	24.7	25.0	5.43	21.6	1.45	0.932	4.08	0.873	45.6
1000S300-54	0.625	0.0566	50	3.24	0.953	14.1	3.85	1.02	1.04	2.12	12.8	1.90	85.5	73.6	2.12	16.5	20.0	15.1	1.02	19.9	1.89	1.19	4.41	0.816	58.0
1000S300-68	0.625	0.0713	50	4.06	1.19	17.5	3.83	1.26	1.03	4.27	16.6	2.80	126	102	4.27	21.1	24.6	20.5	2.02	24.6	1.87	1.18	4.39	0.818	57.8
1000S300-97	0.625	0.1017	50	5.71	1.68	24.3	3.81	1.70	1.01	12.6	23.9	4.50	202	167	9.17	30.2	33.2	32.1	5.78	33.6	1.84	1.16	4.35	0.821	57.4
1200S162-68	0.500	0.0713	50	3.81	1.12	19.5	4.17	0.255	0.477	3.54	18.3	2.64	119	95.2	3.54	7.52	8.42	8.48	1.90	7.74	0.719	0.485	4.26	0.972	30.2
1200S162-97	0.500	0.1017	50	5.36	1.58	27.0	4.14	0.332	0.459	10.4	26.6	4.09	184	159	9.47	10.3	11.0	11.0	5.43	10.3	0.691	0.470	4.22	0.973	29.5
1200S200-68	0.625	0.0713	50	4.06	1.19	22.0	4.29	0.479	0.634	3.54	20.7	2.96	133	111	3.54	11.5	13.2	13.3	2.02	14.2	1.02	0.673	4.46	0.948	38.7
1200S200-97	0.625	0.1017	50	5.71	1.68	30.4	4.26	0.635	0.615	10.4	30.1	4.66	210	184	9.47	16.1	17.5	17.7	5.78	19.1	0.987	0.656	4.42	0.950	38.1
1200S250-68	0.625	0.0713	50	4.30	1.26	24.5	4.40	0.836	0.813	3.54	22.9	3.01	135	119	3.54	16.0	18.8	17.5	2.14	24.0	1.36	0.884	4.68	0.915	48.1
1200S250-97	0.625	0.1017	50	6.05	1.78	34.0	4.37	1.12	0.794	10.4	33.7	5.04	227	196	9.47	22.8	25.2	25.4	6.13	32.7	1.33	0.867	4.64	0.918	47.5
1200S300-68	0.625	0.0713	50	4.54	1.33	27.0	4.50	1.32	0.994	3.54	25.7	3.32	149	123	3.54	21.1	25.1	20.9	2.26	37.1	1.73	1.10	4.92	0.877	57.2
1200S300-97	0.625	0.1017	50	6.40	1.88	37.6	4.47	1.79	0.975	10.4	37.0	5.83	262	205	9.47	30.3	33.9	32.7	6.48	50.9	1.69	1.09	4.88	0.880	56.7

Table Notes
1 - Gross section properties are based on the full-unreduced cross section of the joist sections, away from the punchouts.
2 - The factored moment resistance for design is based on the lesser of local and distortional buckling. Distortional buckling is based on an assumed rotational stiffness of Kφ = 0.

Track Designation	Base Design Thickness (in.)	F_y (ksi)	GROSS							EFFECTIVE			TORSIONAL						L_u (in.)
			Weight (lb/ft)	Area (in.^{2})	I_x (in.^{4})	r_x (in.)	I_y (in.^{4})	r_y (in.)	V_{rg} (kip)	I_{xd} (in.^{4})	S_{xe} (in.^{3})	M_{rx} (k-in.)	Jx1000 (in.^{4})	C_w (in.^{6})	x_o (in.)	m (in.)	r_o (in.)	β	
362T125-33	0.0346	33	0.721	0.212	0.438	1.44	0.0301	0.377	1.31	0.381	0.174	5.17	0.0845	0.0756	0.658	0.409	1.63	0.836	25.7
362T125-43	0.0451	33	0.939	0.276	0.571	1.44	0.0388	0.375	2.22	0.525	0.245	7.27	0.187	0.0978	0.654	0.407	1.62	0.838	25.7
362T125-54	0.0566	50	1.18	0.346	0.723	1.45	0.0481	0.373	4.31	0.671	0.312	14.0	0.369	0.123	0.648	0.404	1.63	0.841	20.9
362T150-33	0.0346	33	0.780	0.229	0.499	1.48	0.0499	0.467	1.31	0.409	0.180	5.36	0.0914	0.124	0.854	0.522	1.77	0.766	30.9
362T150-43	0.0451	33	1.02	0.298	0.650	1.48	0.0644	0.465	2.23	0.568	0.255	7.58	0.202	0.160	0.850	0.519	1.77	0.768	31.0
362T150-54	0.0566	50	1.27	0.374	0.823	1.48	0.0801	0.463	4.32	0.726	0.325	14.7	0.400	0.202	0.844	0.516	1.77	0.772	25.2
362T150-68	0.0713	50	1.60	0.471	1.05	1.49	0.100	0.460	6.02	0.982	0.449	20.2	0.799	0.257	0.836	0.511	1.77	0.777	25.3
362T150-97	0.1017	50	2.29	0.672	1.54	1.51	0.138	0.453	8.48	1.54	0.733	33.0	2.32	0.374	0.820	0.501	1.78	0.787	25.8
362T200-33	0.0346	33	0.897	0.264	0.619	1.53	0.110	0.645	1.31	0.458	0.190	5.65	0.105	0.269	1.27	0.754	2.09	0.631	41.0
362T200-43	0.0451	33	1.17	0.343	0.808	1.53	0.142	0.643	2.23	0.640	0.270	8.03	0.233	0.350	1.27	0.752	2.09	0.633	41.1
362T200-54	0.0566	50	1.47	0.431	1.02	1.54	0.177	0.641	4.32	0.820	0.345	15.5	0.460	0.442	1.26	0.748	2.09	0.638	33.4
362T200-68	0.0713	50	1.85	0.543	1.31	1.55	0.221	0.638	6.02	1.12	0.480	21.6	0.919	0.564	1.25	0.743	2.09	0.643	33.6
362T200-97	0.1017	50	2.63	0.773	1.92	1.58	0.308	0.632	8.48	1.82	0.804	36.2	2.67	0.825	1.23	0.732	2.10	0.655	34.3
400T125-33	0.0346	33	0.765	0.225	0.549	1.56	0.0309	0.371	1.20	0.480	0.201	5.97	0.0897	0.0946	0.630	0.396	1.73	0.867	25.6
400T125-43	0.0451	33	1.00	0.293	0.716	1.56	0.0398	0.369	2.22	0.660	0.282	8.37	0.198	0.122	0.626	0.394	1.72	0.868	25.6
400T125-54	0.0566	50	1.25	0.367	0.904	1.57	0.0493	0.367	4.31	0.842	0.359	16.1	0.392	0.154	0.621	0.390	1.73	0.871	20.8
400T150-33	0.0346	33	0.824	0.242	0.622	1.60	0.0513	0.460	1.20	0.514	0.208	6.19	0.0966	0.155	0.821	0.507	1.86	0.805	30.8
400T150-43	0.0451	33	1.07	0.315	0.811	1.60	0.0662	0.458	2.23	0.711	0.293	8.71	0.214	0.200	0.817	0.504	1.86	0.807	30.9
400T150-54	0.0566	50	1.35	0.396	1.03	1.61	0.0822	0.456	4.32	0.909	0.374	16.8	0.422	0.252	0.811	0.501	1.86	0.810	25.1
400T150-68	0.0713	50	1.70	0.498	1.31	1.62	0.102	0.453	6.66	1.23	0.513	23.1	0.844	0.320	0.804	0.496	1.86	0.814	25.2
400T150-97	0.1017	50	2.42	0.710	1.90	1.64	0.142	0.447	9.39	1.90	0.832	37.5	2.45	0.463	0.788	0.487	1.87	0.823	25.6
400T200-33	0.0346	33	0.94	0.277	0.77	1.67	0.113	0.639	1.20	0.57	0.220	6.5	0.11	0.336	1.230	0.737	2.17	0.678	41.0
400T200-43	0.0451	33	1.23	0.360	1.00	1.67	0.146	0.637	2.23	0.80	0.311	9.2	0.24	0.437	1.220	0.734	2.16	0.680	41.1
400T200-54	0.0566	50	1.54	0.452	1.27	1.68	0.182	0.635	4.32	1.02	0.397	17.9	0.48	0.551	1.220	0.730	2.17	0.684	33.4
400T200-68	0.0713	50	1.94	0.569	1.62	1.69	0.227	0.632	6.66	1.39	0.549	24.7	0.97	0.702	1.210	0.725	2.17	0.689	33.6
400T200-97	0.1017	50	2.76	0.811	2.36	1.71	0.318	0.626	9.39	2.24	0.911	41.0	2.80	1.020	1.190	0.715	2.17	0.699	34.1
600T125-18	0.0188	33	0.54	0.160	0.78	2.20	0.019	0.342	0.13	0.49	0.103	3.1	0.02	0.131	0.522	0.341	2.29	0.948	24.9
600T125-33	0.0346	33	1.00	0.294	1.43	2.20	0.034	0.339	0.80	1.20	0.297	8.8	0.12	0.238	0.516	0.337	2.29	0.949	24.8
600T125-43	0.0451	33	1.30	0.383	1.86	2.21	0.044	0.337	1.76	1.72	0.461	13.7	0.26	0.307	0.513	0.335	2.29	0.950	24.7
600T125-54	0.0566	50	1.64	0.480	2.34	2.21	0.054	0.335	3.49	2.19	0.592	26.6	0.51	0.384	0.508	0.332	2.29	0.951	20.1
600T150-33	0.0346	33	1.06	0.311	1.59	2.26	0.057	0.426	0.80	1.27	0.303	9.0	0.12	0.390	0.684	0.439	2.40	0.919	30.2
600T150-43	0.0451	33	1.38	0.405	2.07	2.26	0.073	0.424	1.76	1.83	0.474	14.1	0.28	0.504	0.680	0.437	2.40	0.920	30.2
600T150-54	0.0566	50	1.73	0.509	2.61	2.27	0.091	0.422	3.49	2.33	0.609	27.4	0.54	0.633	0.675	0.434	2.40	0.921	24.5
600T150-68	0.0713	50	2.18	0.641	3.31	2.27	0.113	0.419	6.85	3.13	0.891	40.1	1.09	0.797	0.669	0.430	2.41	0.923	24.5
600T150-97	0.1017	50	3.11	0.913	4.78	2.29	0.156	0.414	13.90	4.78	1.440	65.0	3.15	1.140	0.656	0.421	2.42	0.926	24.6
600T200-33	0.0346	33	1.18	0.346	1.91	2.35	0.126	0.604	0.80	1.50	0.333	9.9	0.14	0.847	1.050	0.655	2.64	0.843	40.9
600T200-43	0.0451	33	1.53	0.451	2.49	2.35	0.163	0.602	1.76	2.06	0.565	16.8	0.31	1.100	1.040	0.652	2.64	0.844	40.9
600T200-54	0.0566	50	1.92	0.565	3.15	2.36	0.204	0.600	3.49	2.62	0.717	32.3	0.60	1.380	1.040	0.649	2.65	0.846	33.2
600T200-68	0.0713	50	2.42	0.712	3.99	2.37	0.254	0.597	6.85	3.51	0.973	43.8	1.21	1.750	1.030	0.644	2.65	0.849	33.3
600T200-97	0.1017	50	3.45	1.020	5.77	2.39	0.355	0.591	13.90	5.51	1.570	70.6	3.50	2.510	1.020	0.635	2.66	0.854	33.4

Table Notes
1- Track web depths are equal to the nominal stud depth plus two times the design thickness plus the inside bend radius.
2- If present, hems are ignored.

contact@cpt-group.ca Tel: (289) 588-0936 Address: 36 Simpson Rd Bolton, ON L7E 1Y4

Track Designation	Base Design Thickness (in.)	F_y (ksi)	GROSS							EFFECTIVE			TORSIONAL						L_u (in.)
			Weight (lb/ft)	Area (in.^{2})	I_x (in.^{4})	r_x (in.)	I_y (in.^{4})	r_y (in.)	V_{rg} (kip)	I_{xd} (in.^{4})	S_{xe} (in.^{3})	M_{rx} (k-in.)	Jx1000 (in.^{4})	C_w (in.^{6})	x_o (in.)	m (in.)	r_o (in.)	β	
600T300-33	0.0346	33	1.41	0.415	2.56	2.48	0.384	0.962	0.80	1.63	0.331	9.8	0.17	2.520	1.850	1.110	3.24	0.674	61.3
600T300-43	0.0451	33	1.84	0.541	3.34	2.48	0.498	0.960	1.76	2.39	0.555	16.5	0.37	3.280	1.850	1.110	3.24	0.675	61.4
600T300-54	0.0566	50	2.31	0.679	4.21	2.49	0.622	0.957	3.49	3.05	0.721	32.5	0.73	4.130	1.840	1.110	3.24	0.677	49.9
600T300-68	0.0713	50	2.91	0.855	5.35	2.50	0.779	0.954	6.84	4.11	1.050	47.4	1.45	5.240	1.830	1.100	3.25	0.681	50.0
600T300-97	0.1017	50	4.15	1.220	7.76	2.52	1.100	0.949	13.90	6.59	1.720	77.6	4.20	7.580	1.820	1.090	3.25	0.688	50.4
800T125-43	0.0451	33	1.61	0.473	3.77	2.82	0.046	0.311	1.32	3.34	0.640	19.0	0.32	0.589	0.436	0.292	2.87	0.977	23.8
800T125-54	0.0566	50	2.02	0.594	4.75	2.83	0.057	0.309	2.61	4.26	0.824	37.1	0.63	0.735	0.432	0.289	2.88	0.977	19.3
800T125-68	0.0713	50	2.54	0.748	6.00	2.83	0.070	0.307	5.23	5.83	1.220	54.7	1.27	0.920	0.427	0.286	2.88	0.978	19.2
800T125-97	0.1017	50	3.63	1.070	8.61	2.84	0.097	0.301	13.90	8.61	2.060	92.8	3.67	1.300	0.417	0.279	2.89	0.979	19.1
800T150-43	0.0451	33	1.69	0.496	4.14	2.89	0.0774	0.395	1.32	3.52	0.655	19.5	0.336	0.972	0.584	0.386	2.98	0.961	29.3
800T150-54	0.0566	50	2.12	0.622	5.21	2.90	0.0961	0.393	2.61	4.49	0.844	38.0	0.664	1.22	0.580	0.383	2.98	0.962	23.8
800T150-68	0.0713	50	2.67	0.783	6.59	2.90	0.119	0.390	5.23	6.20	1.26	56.5	1.33	1.53	0.575	0.379	2.98	0.963	23.7
800T150-97	0.1017	50	3.80	1.12	9.48	2.91	0.165	0.385	13.9	9.48	2.19	98.6	3.85	2.16	0.564	0.372	2.99	0.965	23.7
800T200-43	0.0451	33	1.84	0.541	4.89	3.01	0.175	0.569	1.32	3.82	0.676	20.1	0.37	2.120	0.913	0.587	3.19	0.918	40.3
800T200-54	0.0566	50	2.31	0.679	6.15	3.01	0.218	0.567	2.61	4.89	0.872	39.2	0.73	2.660	0.908	0.584	3.20	0.919	32.7
800T200-68	0.0713	50	2.91	0.854	7.79	3.02	0.272	0.564	5.23	6.81	1.310	59.0	1.45	3.360	0.902	0.580	3.20	0.921	32.7
800T200-97	0.1017	50	4.15	1.220	11.20	3.03	0.379	0.558	13.90	10.80	2.350	106.0	4.20	4.790	0.889	0.571	3.21	0.923	32.7
800T300-43	0.0451	33	2.15	0.631	6.37	3.18	0.540	0.925	1.32	4.60	0.736	21.9	0.428	6.33	1.66	1.02	3.70	0.800	61.4
800T300-54	0.0566	50	2.69	0.792	8.03	3.18	0.675	0.923	2.60	5.92	0.955	43.0	0.845	7.96	1.65	1.02	3.70	0.801	49.9
800T300-68	0.0713	50	3.39	1.00	10.2	3.19	0.844	0.920	5.22	8.05	1.55	69.6	1.69	10.1	1.64	1.02	3.71	0.803	49.9
800T300-97	0.1017	50	4.84	1.42	14.7	3.21	1.19	0.914	13.9	12.7	2.59	116	4.90	14.5	1.63	1.01	3.72	0.808	50.1
1000T125-54	0.0566	50	2.41	0.707	8.33	3.43	0.059	0.288	2.08	7.13	1.060	47.5	0.76	1.210	0.376	0.256	3.47	0.988	18.5
1000T125-68	0.0713	50	3.03	0.890	10.50	3.44	0.073	0.286	4.17	9.86	1.580	70.9	1.51	1.510	0.372	0.253	3.47	0.989	18.4
1000T125-97	0.1017	50	4.32	1.270	15.10	3.45	0.100	0.281	12.20	15.10	2.750	124.0	4.38	2.120	0.363	0.247	3.48	0.989	18.3
1000T150-54	0.0566	50	2.50	0.735	9.06	3.51	0.100	0.368	2.08	7.47	1.08	48.5	0.785	2.01	0.509	0.342	3.57	0.980	23.0
1000T150-68	0.0713	50	3.15	0.926	11.4	3.52	0.124	0.366	4.17	10.4	1.62	73.0	1.57	2.52	0.505	0.339	3.57	0.980	23.0
1000T150-97	0.1017	50	4.49	1.32	16.4	3.53	0.172	0.361	12.2	16.4	2.90	131	4.55	3.56	0.495	0.332	3.58	0.981	22.9
1000T200-54	0.0566	50	2.69	0.792	10.50	3.65	0.228	0.537	2.08	8.04	1.110	50.0	0.85	4.430	0.809	0.531	3.77	0.954	32.0
1000T200-68	0.0713	50	3.39	1.000	13.30	3.65	0.284	0.534	4.17	11.30	1.680	75.8	1.69	5.580	0.803	0.527	3.78	0.955	32.0
1000T200-97	0.1017	50	4.84	1.420	19.10	3.66	0.397	0.528	12.20	18.40	3.080	139.0	4.90	7.920	0.791	0.519	3.79	0.956	31.9
1000T300-54	0.0566	50	3.08	0.905	13.4	3.85	0.714	0.888	2.08	9.36	1.19	53.6	0.966	13.3	1.50	0.947	4.23	0.874	49.6
1000T300-68	0.0713	50	3.88	1.14	17.0	3.86	0.894	0.885	4.17	13.7	1.90	85.6	1.93	16.8	1.49	0.943	4.23	0.876	49.6
1000T300-97	0.1017	50	5.53	1.63	24.4	3.88	1.26	0.880	12.1	21.4	3.59	161	5.60	24.0	1.48	0.934	4.24	0.879	49.6
1200T125-68	0.0713	50	3.51	1.030	16.80	4.04	0.074	0.268	3.47	15.10	1.930	87.0	1.75	2.270	0.329	0.227	4.06	0.993	17.7
1200T125-97	0.1017	50	5.01	1.470	24.10	4.04	0.102	0.264	10.10	23.60	3.440	155.0	5.08	3.170	0.322	0.222	4.07	0.994	17.6
1200T150-68	0.0713	50	3.64	1.07	18.1	4.12	0.127	0.345	3.47	15.9	1.99	89.4	1.81	3.79	0.450	0.307	4.16	0.988	22.2
1200T150-97	0.1017	50	5.18	1.52	26.0	4.13	0.176	0.340	10.1	25.5	3.62	163	5.25	5.33	0.441	0.301	4.17	0.989	22.1
1200T200-68	0.0713	50	3.88	1.140	20.80	4.27	0.294	0.508	3.47	17.10	2.060	92.6	1.93	8.430	0.725	0.483	4.36	0.972	31.2
1200T200-97	0.1017	50	5.53	1.630	29.80	4.28	0.410	0.502	10.10	28.20	3.820	172.0	5.60	11.900	0.714	0.476	4.37	0.973	31.1
1200T300-68	0.0713	50	4.36	1.28	26.1	4.51	0.932	0.852	3.47	19.0	2.14	96.2	2.17	25.5	1.37	0.880	4.79	0.918	49.0
1200T300-97	0.1017	50	6.22	1.83	37.4	4.53	1.31	0.847	10.1	32.1	4.05	182	6.30	36.4	1.36	0.871	4.80	0.920	49.0

Table Notes
1- Track web depths are equal to the nominal stud depth plus two times the design thickness plus the inside bend radius.
2- If present, hems are ignored.

CANADIAN Panel Tech

MEGA FRAMING 2024

Phone:
(289) 588-0936

E-Mail:
contact@cpt-group.ca

Address:
36 Simpson Rd Bolton,ON L7E 1Y4

www.steelstuds.ca